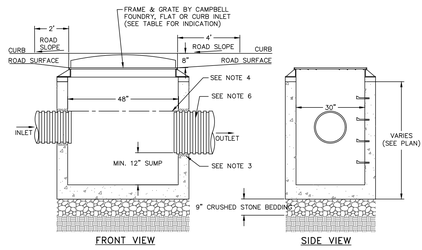

NOTES:

1. PRECAST CONCRETE CATCH BASIN WITH CONCRETE STRENGTH OF 4,000 PSI @ 28 DAYS.
2. THE ENDS OF ALL PIPES SHALL BE CUT OFF FLUSH WITH THE INSIDE SURFACE OF THE CATCH BASIN AND PARGED AROUND.
3. PIPES SHALL BE PARGED AROUND INTERIOR AND EXTERIOR PRIOR TO BACKFILLING OF STRUCTURE. CONNECTIONS MADE WITHIN 10 FEET OF A WATER MAIN (OR SERVICE LINE) OR A SEWER MAIN (OR SERVICE LATERAL) SHALL BE MADE WATERTIGHT.
4. PROVIDE A MINIMUM 0.1' DROP BETWEEN INLET AND OUTLET INVERTS (MATCH CROWNS FOR PIPES WITH DIFFERENT SIZE) UNLESS OTHERWISE NOTED ON THE PLAN.
5. CATCH BASINS WITH AN INTERIOR DEPTH OF 4' AND GREATER SHALL BE FURNISHED WITH STEEL REINFORCED POLYPROPYLENE PLASTIC STEPS AT 12" INTERVALS.
6. HDPE PIPE SHALL BE PROVIDED WITH WATERTIGHT CONNECTIONS. ADS MODEL N12 WT IB OR APPROVED EQUAL.

CATCH BASIN DETAIL
NOT TO SCALE

NOTES:
1. EXCAVATION AND TRENCHING SHALL MEET ALL OSHA REQUIREMENTS.

STORM LINE TRENCH DETAIL
NOT TO SCALE

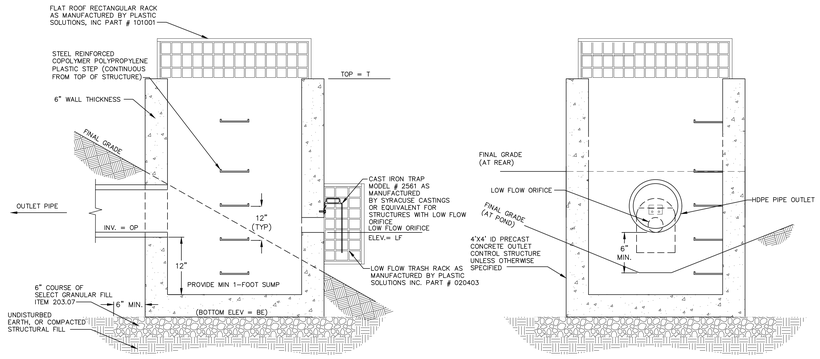

OUTLET CONTROL STRUCTURE DATA										
OCS ID	STRUCTURE DIMENSIONS	LOW FLOW ORIFICE DIM. (IN)	"LF" (FT)	HIGH FLOW ORIFICE DIM	# OF HIGH FLOW INLETS	"HF" (FT)	"T" (FT)	OUTLET PIPE ø (IN)	"OP" (FT)	HIGH FLOW ORIFICE TRASH RACK PART #
3	4'X4' I.D.	1"W X .75"H	59.4	NONE	NONE	N/A	61.65	15	55.00	N/A

NOTES:
1. ALL TRASH RACKS SHALL HAVE UV PROTECTION MEETING OR EXCEEDING THE REQUIREMENTS OF ASTM D2565-99.
2. TRASH RACKS SHALL BE SECURED PER THE MANUFACTURER'S RECOMMENDATIONS.
3. WHERE HIGH FLOW ORIFICE EXTENDS TO TOP OF STRUCTURE, THE MAXIMUM ALLOWABLE GAP BETWEEN THE TRASH RACKS SHALL BE 4".

INFILTRATION OUTLET CONTROL STRUCTURE DETAIL
NOT TO SCALE

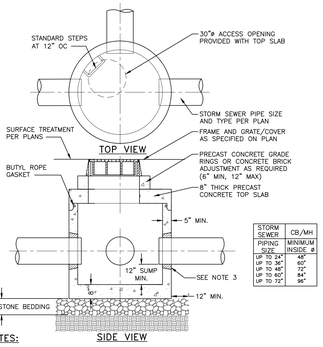

STORM SEWER	CB/MH
PIPING SIZE	MINIMUM INSIDE ø
UP TO 24"	48"
UP TO 36"	60"
UP TO 48"	72"
UP TO 60"	84"
UP TO 72"	96"

NOTES:
1. PRECAST CONCRETE MANHOLE WITH CONCRETE STRENGTH OF 4,000 PSI @ 28 DAYS.
2. THE ENDS OF ALL PIPES SHALL BE CUT OFF FLUSH WITH THE INSIDE SURFACE OF THE MANHOLE AND PARGED AROUND.
3. PIPES SHALL BE PARGED AROUND INTERIOR AND EXTERIOR PRIOR TO BACKFILLING OF STRUCTURE. 4. CONCRETE STRUCTURE AND CASTING SHALL BE RATED FOR H20 TRAFFIC LOADING.
5. INLET FRAME SHALL BE FULLY SUPPORTED ON THE CONCRETE STRUCTURE FOR H20 LOADING.
6. MANHOLES WITH AN INTERIOR DEPTH OF 4' AND GREATER SHALL BE FURNISHED WITH STEEL REINFORCED POLYPROPYLENE PLASTIC STEPS AT 12" INTERVALS.

STORMWATER MANHOLE DETAIL
NOT TO SCALE

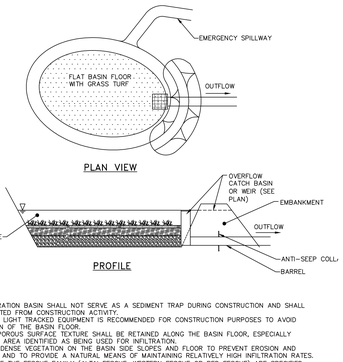

NOTES:
1. THE INFILTRATION BASIN SHALL NOT SERVE AS A SEDIMENT TRAP DURING CONSTRUCTION AND SHALL BE PROTECTED FROM CONSTRUCTION ACTIVITY.
2. RELATIVELY LIGHT TRACKED EQUIPMENT IS RECOMMENDED FOR CONSTRUCTION PURPOSES TO AVOID COMPACTION OF THE BASIN FLOOR.
3. A HIGHLY POROUS SURFACE TEXTURE SHALL BE RETAINED ALONG THE BASIN FLOOR, ESPECIALLY WITHIN THE AREA IDENTIFIED AS BEING USED FOR INFILTRATION.
4. ESTABLISH DENSE VEGETATION ON THE BASIN SIDE SLOPES AND FLOOR TO PREVENT EROSION AND SLOUGHING AND TO PROVIDE A NATURAL MEANS OF MAINTAINING RELATIVELY HIGH INFILTRATION RATES. GRASSES OF THE FESCUE FAMILY (ALTAI FESCUE, WESTERN FESCUE OR RED FESCUE) ARE SPECIFIED ON THIS PLAN, PRIMARILY DUE TO THEIR ADAPTABILITY TO DRY SANDY SOILS, DROUGHT RESISTANCE, HARDINESS, AND ABILITY TO WITHSTAND BRIEF INUNDATIONS. FESCUE WILL ALSO ALLOW FOR LONG INTERVALS BETWEEN MOWINGS. WHICH SHALL OCCUR TWICE PER YEAR MINIMUM, TYPICALLY IN JUNE AND SEPTEMBER IS SATISFACTORY.
5. THE BERMS SHALL BE SUFFICIENTLY COMPACTED AND OF SUCH MATERIAL TO PREVENT SEEPAGE.

TYPICAL INFILTRATION BASIN DETAIL
NOT TO SCALE

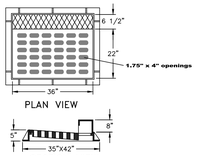

NOTES:
1. HEAVY DUTY RECTANGULAR STORMWATER INLET GRATE TO BE CAMPBELL FOUNDRY MODEL 2541, OR APPROVED EQUAL.
2. CATCH BASINS TO RECEIVE CURB INLETS ARE: CB 104, CB 301, CB 301A, CB 302, CB 303, CB 304, AND CB 305.

CAST IRON STORMWATER CURB INLET GRATE DETAIL
NOT TO SCALE

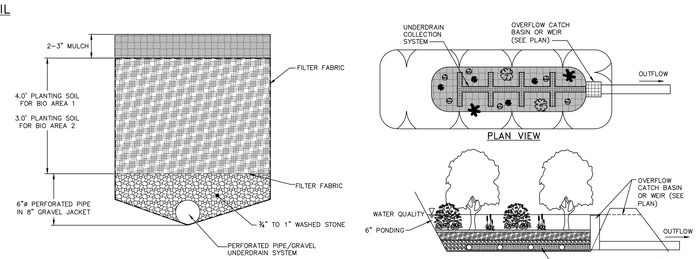

NOTES:
1. NO RUNOFF IS TO ENTER THE BIORETENTION AREA UNTIL ALL CONTRIBUTING DRAINAGE AREAS HAVE BEEN STABILIZED.
2. LANDSCAPING TO BE PROVIDED BY THE PROJECT LANDSCAPE ARCHITECT AND AS FOLLOWS:
   - NATIVE PLANT SPECIES SHOULD BE SPECIFIED BASED ON SPECIFIED ZONE OF HYDRIC TOLERANCE
   - SELECTIONS OF TREES WITH AN UNDERSTORY OF SHRUBS AND HERBACEOUS MATERIALS SHOULD BE PROVIDED.
   - WOODY VEGETATION SHOULD NOT BE SPECIFIED AT INFLOW LOCATIONS.
   - TREES SHOULD BE PLANTED PRIMARILY ALONG THE PERIMETER OF THE FACILITY.
   - A TREE DENSITY OF 1 TREE PER 100 SQUARE FEET IS RECOMMENDED, AND SHRUBS/HERBACEOUS VEGETATION SHOULD GENERALLY BE PLANTED AT HIGHER DENSITIES (FIVE FEET ON CENTER AND 2.5 FEET ON CENTER, RESPECTIVELY).
3. SEE PLAN FOR PRETREATMENT.

TYPICAL BIORETENTION DETAIL
NOT TO SCALE

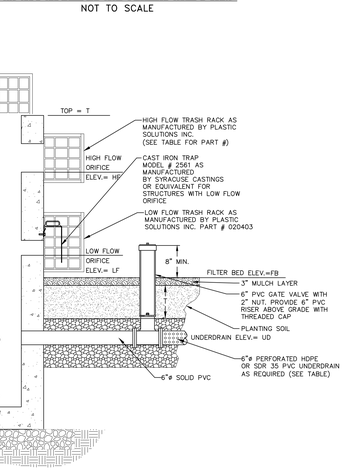

OUTLET CONTROL STRUCTURE DATA										
OCS ID	STRUCTURE DIMENSIONS	LOW FLOW ORIFICE DIM. (IN)	"LF" (FT)	HIGH FLOW ORIFICE DIM	# OF HIGH FLOW INLETS	"HF" (FT)	"T" (FT)	OUTLET PIPE ø (IN)	"OP" (FT)	HIGH FLOW ORIFICE TRASH RACK PART #
1	4'X4' I.D.	3	96.5	2.75"W X 0.6"H	1	97.9	98.8	18	94.00	020601
2	4'X4' I.D.	3	64.5	2.0"W X 0.5"H	1	65.6	68.5	24	62.00	020601

NOTES:
1. ALL TRASH RACKS SHALL HAVE UV PROTECTION MEETING OR EXCEEDING THE REQUIREMENTS OF ASTM D2565-99.
2. TRASH RACKS SHALL BE SECURED PER THE MANUFACTURER'S RECOMMENDATIONS.
3. WHERE HIGH FLOW ORIFICE EXTENDS TO TOP OF STRUCTURE, THE MAXIMUM ALLOWABLE GAP BETWEEN THE TRASH RACKS SHALL BE 4".

BIORETENTION OUTLET CONTROL STRUCTURE DETAIL
NOT TO SCALE

EMERGENCY OVERFLOW WEIR TABLE

SWM ID	OVERFLOW WEIR ELEVATION (FT)	DIMENSION A (FT)	DIMENSION B (FT)	DIMENSION D (IN)
BIORETENTION AREA 1	99.0	15	3	12
BIORETENTION AREA 2	68.8	15	3	12
INFILTRATION BASIN 3	62.0	15	3	12

NOTES:
1. RIP RAP OUTLET PROTECTION SHALL BE 15" OF LIGHT STONE FILLING. STONE FILLING SIZE d50=6", RIVER ROCK MAY BE SUBSTITUTED FOR ANGULAR STONE.

EMERGENCY OVERFLOW WEIR DETAIL
NOT TO SCALE

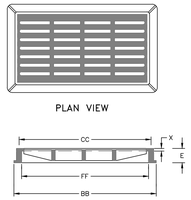

DIMENSION TABLE:

B	C	E	F	X	BB	CC	FF
30"	24"	4"	22"	4"	48"	56"	54"

NOTES:
1. HEAVY DUTY RECTANGULAR STORMWATER INLET GRATE TO BE CAMPBELL FOUNDRY MODEL 3433, OR APPROVED EQUAL.
2. CATCH BASINS TO RECEIVE FLAT INLETS ARE: CB 101, CB 101A, CB 102, CB 103, CB 202, CB 208, CB 304A, CB 305A AND CB 305B.
3. DMH 1 AND DMH 3 RECEIVE SOLID CAST IRON COVERS.

CAST IRON STORMWATER FLAT INLET GRATE DETAIL
NOT TO SCALE

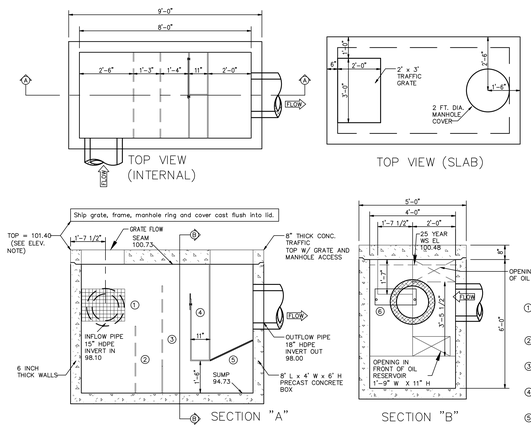

NOTES:
1. WATER QUALITY INLET SHOWN IS "CRYSTAL CLEAN" MODEL # 846 IB BY CRYSTAL STREAM TECHNOLOGIES, INC. OF LAWRENCEVILLE, GA., 1-800-648-6945.
2. ALL PIPES SHALL BE CONSTRUCTED TO BE FLUSH WITH THE INSIDE WALLS.
3. CONTRACTOR IS RESPONSIBLE FOR PROVIDING ALL PIPES AND STRUCTURES BETWEEN AND AROUND THE WATER QUALITY VAULTS.
4. ALL VAULT LIFTING CONNECTIONS SHALL BE LOCATED ON THE OUTSIDE OF THE VAULT WALLS.
5. CONCRETE VAULT PRE-CASTER IS RESPONSIBLE FOR THE STRUCTURAL INTEGRITY OF THE CONCRETE VAULTS. WALL AND SLAB THICKNESSES SHALL BE ALTERED ACCORDINGLY.

WQI DETAIL FOR WQI101
NOT TO SCALE

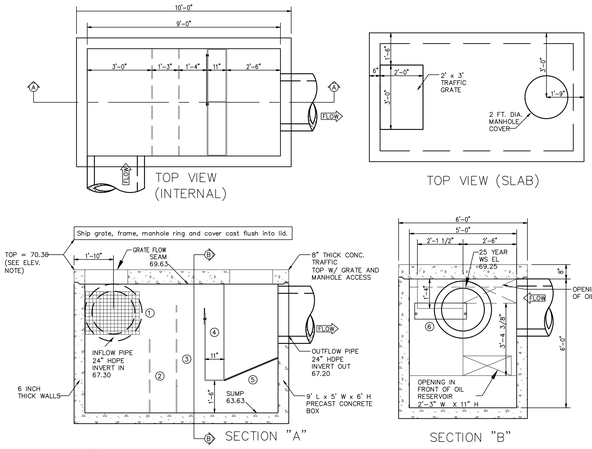

NOTES:
1. WATER QUALITY INLET SHOWN IS "CRYSTAL CLEAN" MODEL # 956 IB BY CRYSTAL STREAM TECHNOLOGIES, INC. OF LAWRENCEVILLE, GA., 1-800-648-6945.
2. ALL PIPES SHALL BE CONSTRUCTED TO BE FLUSH WITH THE INSIDE WALLS.
3. CONTRACTOR IS RESPONSIBLE FOR PROVIDING ALL PIPES AND STRUCTURES BETWEEN AND AROUND THE WATER QUALITY VAULTS.
4. ALL VAULT LIFTING CONNECTIONS SHALL BE LOCATED ON THE OUTSIDE OF THE VAULT WALLS.
5. CONCRETE VAULT PRE-CASTER IS RESPONSIBLE FOR THE STRUCTURAL INTEGRITY OF THE CONCRETE VAULTS. WALL AND SLAB THICKNESSES SHALL BE ALTERED ACCORDINGLY.

WQI DETAIL FOR WQI202
NOT TO SCALE

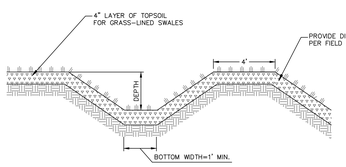

NOTES:
1. MINIMUM 1' DEPTH AND 1' WIDTH FOR ALL SWALES.
2. SWALE SHALL BE SEEDED WITH FAST GERMINATING RYE 15 TO 25 POUNDS PER 1,000 SQUARE FEET AND MULCHED.

TEMPORARY GRASS LINED SWALE/DIKE DETAIL
NOT TO SCALE

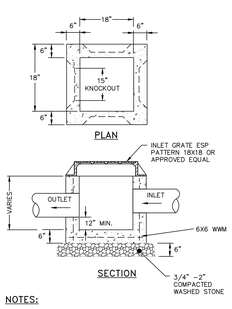

NOTES:
1. YARD INLET BASINS SHALL BE PRE CAST REINFORCED CONCRETE SHALL HAVE A MINIMUM 28-DAY COMPRESSIVE STRENGTH OF 4,000 PSI AND SHALL BE IN CONFORMANCE WITH ASTM 478-68. WALLS AND BASE SHALL BE ONE PIECE CONSTRUCTION. YARD INLET BASIN SHOWN BY EXPANDED SUPPLY PRODUCTS (ESP), 3330 ROUTE 9, COLD SPRING, NY (845) 265-3771.
2. BACKFILL USING SELECT MATERIAL, COMPACTED IN 6" LIFTS.
3. SUMP SHALL BE 12".
4. FRAMES AND GRATES SHALL BE SET IN A FULL BED OF MORTAR.

PRE-CAST CONCRETE YARD INLET DETAIL
NOT TO SCALE

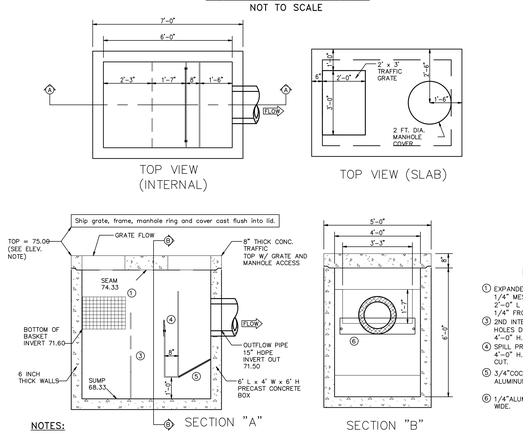

NOTES:
1. WATER QUALITY INLET SHOWN IS "CRYSTAL CLEAN" MODEL # 646 BY CRYSTAL STREAM TECHNOLOGIES, INC. OF LAWRENCEVILLE, GA., 1-800-648-6945.
2. ALL PIPES SHALL BE CONSTRUCTED TO BE FLUSH WITH THE INSIDE WALLS.
3. CONTRACTOR IS RESPONSIBLE FOR PROVIDING ALL PIPES AND STRUCTURES BETWEEN AND AROUND THE WATER QUALITY VAULTS.
4. ALL VAULT LIFTING CONNECTIONS SHALL BE LOCATED ON THE OUTSIDE OF THE VAULT WALLS.
5. CONCRETE VAULT PRE-CASTER IS RESPONSIBLE FOR THE STRUCTURAL INTEGRITY OF THE CONCRETE VAULTS. WALL AND SLAB THICKNESSES SHALL BE ALTERED ACCORDINGLY.

WQI DETAIL FOR WQI 209
NOT TO SCALE

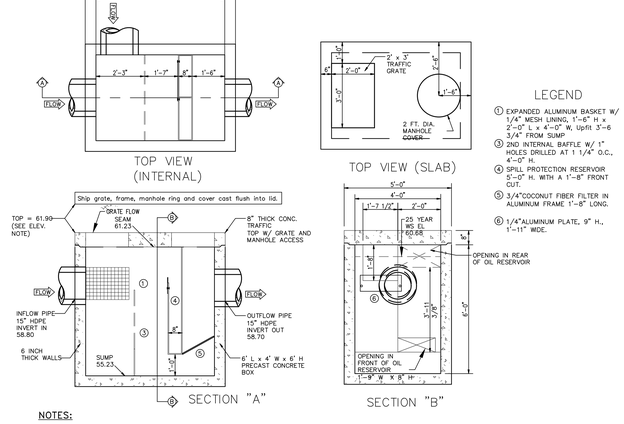

NOTES:
1. WATER QUALITY INLET SHOWN IS "CRYSTAL CLEAN" MODEL # 646 IB BY CRYSTAL STREAM TECHNOLOGIES, INC. OF LAWRENCEVILLE, GA., 1-800-648-6945.
2. ALL PIPES SHALL BE CONSTRUCTED TO BE FLUSH WITH THE INSIDE WALLS.
3. CONTRACTOR IS RESPONSIBLE FOR PROVIDING ALL PIPES AND STRUCTURES BETWEEN AND AROUND THE WATER QUALITY VAULTS.
4. ALL VAULT LIFTING CONNECTIONS SHALL BE LOCATED ON THE OUTSIDE OF THE VAULT WALLS.
5. CONCRETE VAULT PRE-CASTER IS RESPONSIBLE FOR THE STRUCTURAL INTEGRITY OF THE CONCRETE VAULTS. WALL AND SLAB THICKNESSES SHALL BE ALTERED ACCORDINGLY.

WQI DETAIL FOR WQI 301
NOT TO SCALE

RECOMMENDED FOR APPROVAL:

_____ _____
MAYOR OF THE CITY OF BEACON DATE

APPROVED BY RESOLUTION OF THE CITY COUNCIL OF THE CITY OF BEACON

ON THE _____ DAY OF _____, 20_____.

APPROVED BY RESOLUTION OF THE PLANNING BOARD OF THE CITY OF BEACON, NEW YORK, ON THE

_____ DAY OF _____, 20_____, SUBJECT TO ALL REQUIREMENTS AND CONDITIONS OF SAID RESOLUTION. ANY CHANGE, ERASURE, MODIFICATION OR REVISION OF THIS PLAT, AS APPROVED, SHALL VOID THIS APPROVAL.

SIGNED THIS _____ DAY OF _____, 20_____, BY

_____ CHAIRMAN

_____ SECRETARY

IN ABSENCE OF THE CHAIRMAN OR SECRETARY, THE ACTING CHAIRMAN OR ACTING SECRETARY RESPECTIVELY MAY SIGN IN THIS PLACE.

SEAL

JON D. BODENDORF, P.E.
NYS LICENSE NO. 076245
DANIEL G. KOEHLER, P.E.
NYS LICENSE NO. 082716

REVISIONS:			
NO.	DATE	DESCRIPTION	BY
1	2/28/17	PER PLANNING BOARD COMMENTS	CMB
2	3/28/17	PER PLANNING BOARD COMMENTS	MAB
3	4/25/17	NO CHANGE THIS SHEET	MAB
4	5/30/17	PER PLANNING BOARD COMMENTS	MAB
5	7/25/17	PER PLANNING BOARD COMMENTS	MAB
6	8/29/17	NO CHANGE THIS SHEET	MAB
7	9/26/17	PER PLANNING BOARD COMMENTS	MAB
8	10/31/17	NO CHANGE THIS SHEET	MAB
9	11/28/17	NO CHANGE THIS SHEET	MAB

Special Use Permit Application
Stormwater Details
Sheet 14 of 15

Owner:
Scenic Beacon Development, LLC
25 E. Main Street
Beacon, NY 12508

Architect:
Aryeh Siegel, Architect
514 Main Street
Beacon, New York 12508

Site/Civil Engineer:
Hudson Land Design
174 Main Street
Beacon, New York 12508

Surveyor:
TEC Land Surveying
Main Street
Beacon, New York 12508

Edgewater
Beacon, New York
Scale: As Noted
December 22, 2016