SITE DETAILS

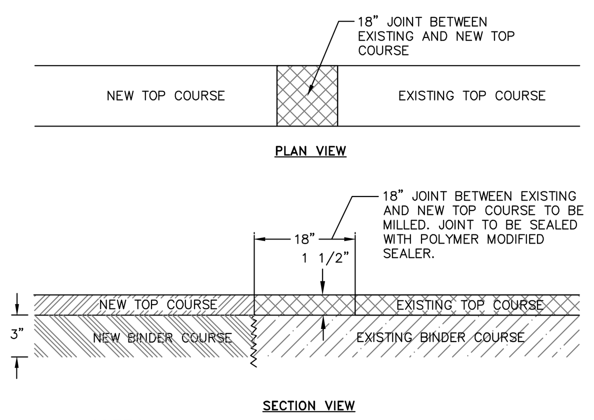

NOTES:
1. 3" BINDER COURSE AND 1½" TOP COURSE TO BE USED FOR RESTORATION OF PAVEMENT WITHIN CITY ROADS.
2. EXCAVATIONS ARE TO BE SAW CUT SMOOTH, ALL EDGES TACK COATED, AND ALL SEAMS SEALED WITH A HOT POLYMER MODIFIED CRACK SEALANT.
3. IF EXISTING ASPHALT PAVEMENT DEPTH IS GREATER THAN THE PROPOSED ASPHALT PAVEMENT SECTION, INCREASE PROPOSED ASPHALT BINDER THICKNESS TO MATCH EXISTING.

MILLED KEYWAY DETAIL
NOT TO SCALE

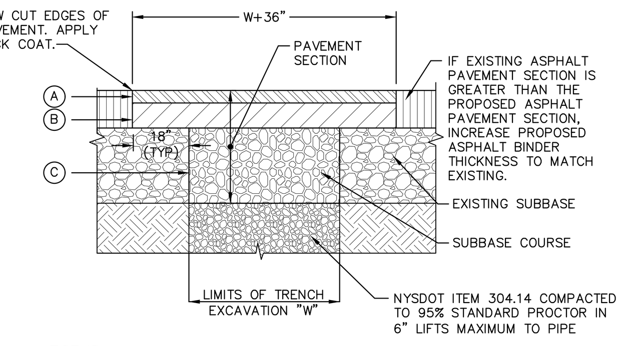

LEGEND
- (A) 1-1/2" ASPHALT CONCRETE TOP COURSE- NYSDOT TYPE 6F
- (B) 2 1/2" ASPHALT CONCRETE BINDER COURSE- NYSDOT TYPE 3
- (C) 6" GRANULAR SUBBASE COURSE- NYSDOT ITEM 304.14

NOTES:
1. SAW CUT MIN. 18" BEYOND EXCAVATION WITH SMOOTH EDGES. 18" JOINT BETWEEN EXISTING AND NEW TOP COURSE TO BE MILLED. JOINT TO BE SEALED WITH POLYMER MODIFIED SEALER.
2. FURNISH, PLACE, AND COMPACT SUBBASE.
3. TACK COAT IN ACCORDANCE WITH NYSDOT STANDARD SPEC.
4. FURNISH AND PLACE ASPHALT CONCRETE PAVEMENT AS SPECIFIED.

PAVEMENT RESTORATION DETAIL
NOT TO SCALE

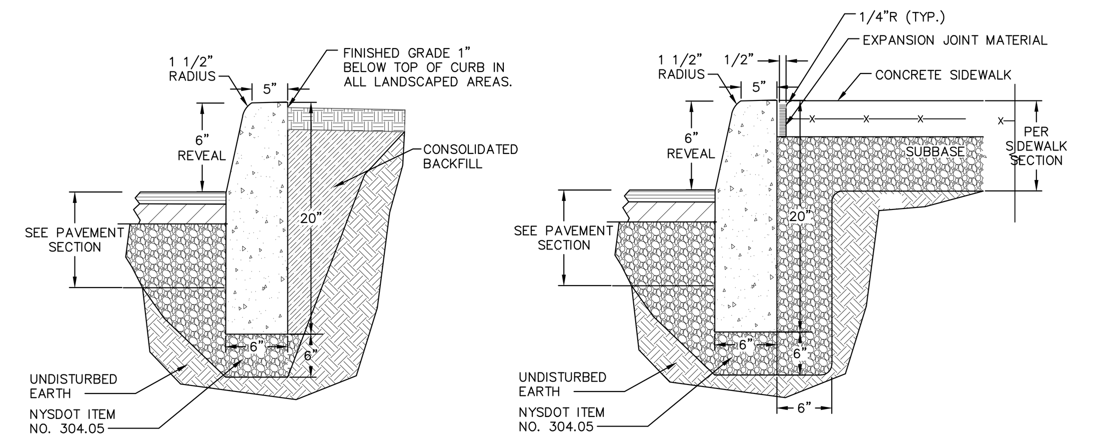

NOTES:
1. CONCRETE CURB SHALL BE 4,000 PSI CAST-IN-PLACE, AND IN ACCORDANCE WITH NYSDOT STANDARD SPECIFICATION SECTION 609.
2. EXPANSION JOINTS OF 1/2" CELLULOSE OR SIMILAR MATERIAL SHALL BE PLACED AT 10 FOOT INTERVALS.
3. FOR MOUNTABLE CURBS ABUTTING SIDEWALK OR OTHER HARDSCAPE, REFER TO "ABUTTING SIDEWALK" DETAIL.

CAST-IN-PLACE CONCRETE CURB DETAIL
NOT TO SCALE

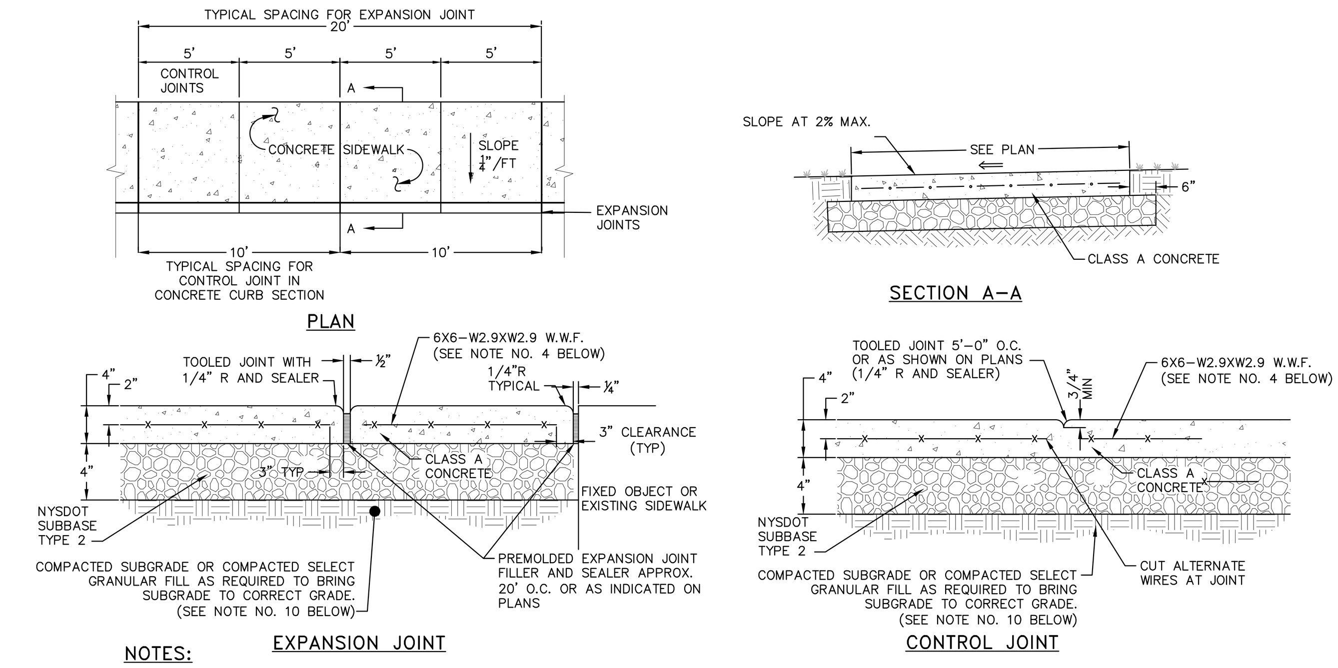

NOTES:
1. 10' SPACING OF CONTROL JOINTS SHALL BE USED FOR CAST IN PLACE CONCRETE CURBS.
2. MATERIAL AND METHODS OF CONSTRUCTION SHALL BE IN CONFORMANCE WITH THE NEW YORK STATE DEPARTMENT OF TRANSPORTATION (NYSDOT) STANDARD SPECIFICATIONS FOR CONSTRUCTION AND MATERIALS, LATEST REVISION.
3. ALL CONCRETE SHALL BE 3,500 PSI CLASS A CONCRETE. CONCRETE MATERIALS, PLACEMENT, AND CONSTRUCTION SHALL CONFORM WITH SECTION 500 OF THE ABOVE REFERENCED NYSDOT STANDARD SPECIFICATIONS.
4. REINFORCING STEEL FOR CONCRETE SHALL CONFORM WITH SECTION 556 – REINFORCING STEEL FOR CONCRETE STRUCTURES OF THE ABOVE REFERENCED NYSDOT STANDARD SPECIFICATIONS AND AS SPECIFICALLY CALLED OUT IN THE DRAWINGS.
5. ALL EXPOSED SURFACED SHALL HAVE A BROOM TEXTURED FINISH.
6. EXPANSION JOINTS SHALL BE LOCATED A MAXIMUM OF 20' ON CENTER, OR AS INDICATED ON PLANS.
7. JOINTS SHALL NOT BE SAW CUT.
8. EXPOSED CONCRETE SURFACES SHALL BE TREATED WITH "SUREBOND"/"SAFEBOND" SB-7000 INTENSIFIER BRIGHT PROTECTOR AND SIDEWALK SEALER, OR EQUAL. RATE AND METHOD OF APPLICATION SHALL BE IN ACCORDANCE WITH MANUFACTURE'S RECOMMENDATIONS.
9. SUBBASE MATERIAL SHALL CONFORM WITH SECTION 304 OF THE ABOVE REFERENCED NYSDOT STANDARD.
10. WHERE IT IS NECESSARY TO PLACE FILL FOR PURPOSE OF BRINGING THE SUBGRADE ELEVATION UP TO A SPECIFIED GRADE, THE FILL MATERIAL PLACED SHALL BE IN CONFORMATION WITH SECTION 203-EXCAVATION AND EMBANKMENT OF THE ABOVE REFERENCED NYSDOT STANDARD SPECIFICATIONS.
11. ALL WORK SHALL CONFORM WITH SECTION 608-SIDEWALK, DRIVEWAYS, AND BICYCLE PATHS OF THE ABOVE REFERENCED NYSDOT STANDARD SPECIFICATIONS.

CONCRETE SIDEWALK DETAIL
NOT TO SCALE

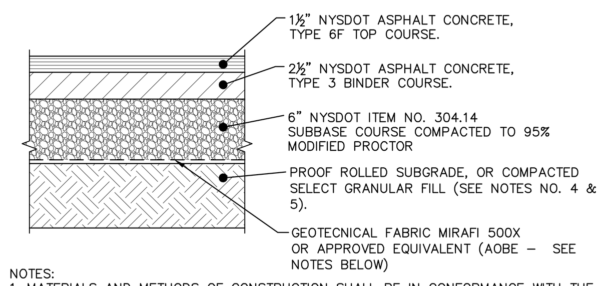

NOTES:
1. MATERIALS AND METHODS OF CONSTRUCTION SHALL BE IN CONFORMANCE WITH THE NEW YORK STATE DEPARTMENT OF TRANSPORTATION (NYSDOT) STANDARD SPECIFICATIONS FOR CONSTRUCTION AND MATERIALS, LATEST REVISION.
2. SUBGRADE SHALL NOT INCLUDE FROZEN MATERIALS, DEBRIS, ORGANIC MATERIALS, LARGE STONES OR OTHER UNSUITABLE MATERIALS.
3. TACK COAT WHEN SPECIFIED OR CALLED OUT IN THESE DRAWINGS OR REQUIRED BY THE REFERENCED SPECIFICATIONS SHALL CONFORM WITH SECTION 407-TACK COAT OF THE ABOVE REFERENCED NYSDOT STANDARD SPECIFICATIONS.
4. WHERE IT IS NECESSARY TO PLACE FILL FOR PURPOSES OF BRINGING THE SUBGRADE ELEVATION UP TO A SPECIFIED GRADE, THE FILL MATERIAL PLACED SHALL BE IN CONFORMANCE WITH SECTION 203-EXCAVATION AND EMBANKMENT OF THE ABOVE REFERENCED NYSDOT STANDARD SPECIFICATIONS.
5. IT IS EXPECTED THAT THE EXISTING SITE SUB-SOILS ARE SUITABLE. IF UNSUITABLE SOILS ARE ENCOUNTERED DURING CONSTRUCTION, THE CONTRACTOR SHALL CONTACT THE ENGINEER FOR POSSIBLE MODIFICATIONS TO THE PAVEMENT DETAIL.

PAVEMENT SECTION DETAIL
NOT TO SCALE

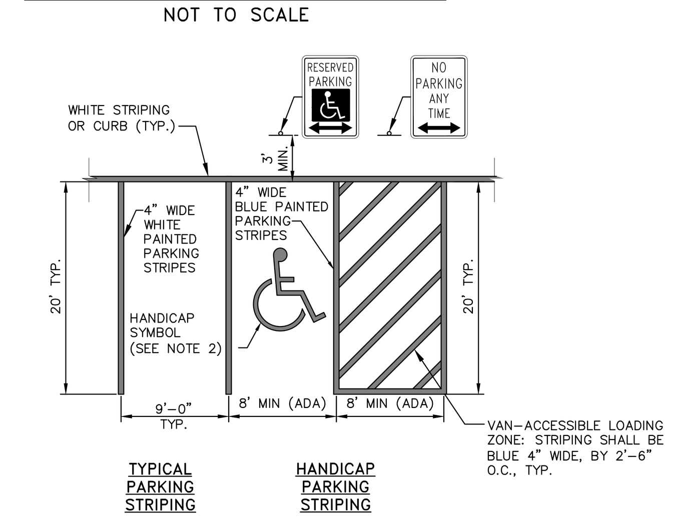

NOTES:
1. ALL DIMENSIONS SUBJECT TO CURRENT MUNICIPALITY ZONING AND SITE REGULATIONS.
2. PAINTED HANDICAP SYMBOL TO BE IN ACCORDANCE WITH NYSDOT AND ADA STANDARDS.
3. IF PARKING ABUTS A SIDEWALK, THEN THE REGULATORY SIGNS SHALL BE PLACED BEHIND THE SIDEWALK.

PARKING AND STRIPING DETAIL
NOT TO SCALE

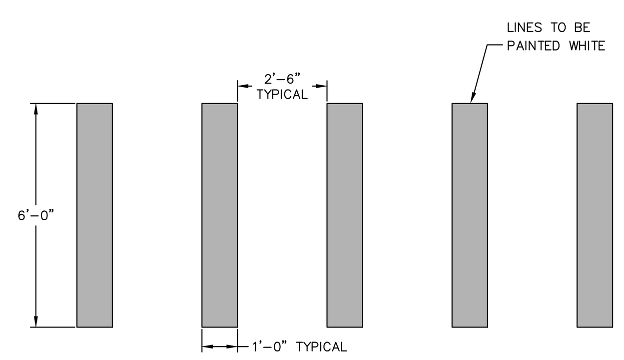

PAINTED CROSSWALK DETAIL
NOT TO SCALE

EROSION AND SEDIMENT CONTROL DETAILS

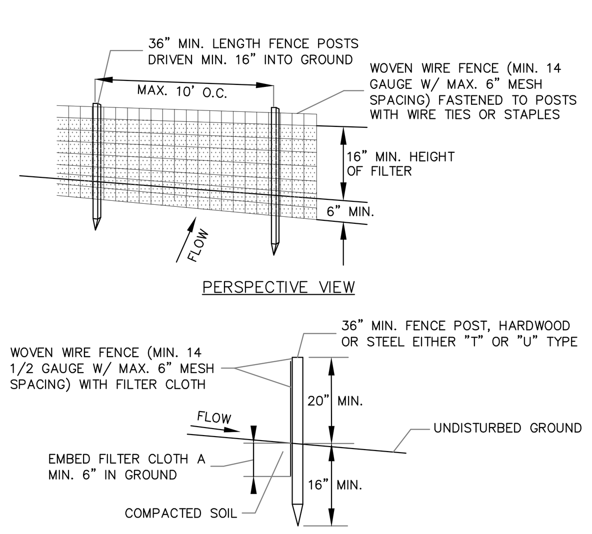

NOTES:
1. FILTER CLOTH TO BE FASTENED SECURELY TO WOVEN WIRE FENCE WITH TIES SPACED EVERY 24" AT TOP AND MID SECTION.
2. WHEN TWO SECTIONS OF FILTER CLOTH ADJOIN EACH OTHER THEY SHALL BE OVER-LAPPED BY SIX INCHES AND FOLDED. FILTER CLOTH SHALL BE EITHER FILTER X, MIRAFI 100X, STABILINKA T140N OR APPROVED EQUAL.
3. PREFABRICATED UNITS SHALL BE GEOFAB, ENVIROFENCE OR APPROVED EQUAL.
4. MAINTENANCE SHALL BE PERFORMED AS NEEDED AND MATERIAL REMOVED WHEN "BULGES" DEVELOP IN THE SILT FENCE.

SILT FENCE DETAIL
NOT TO SCALE

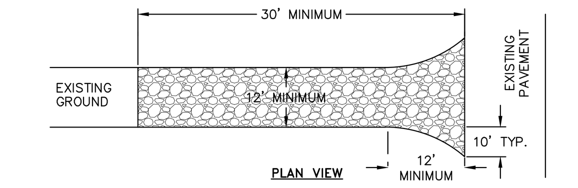

NOTES:
1) STONE SIZE – USE 1-4 INCH STONE, OR RECLAIMED OR RECYCLED CONCRETE EQUIVALENT.
2) LENGTH – NOT LESS THAN 30 FEET FOR A SINGLE RESIDENCE LOT.
3) THICKNESS – NOT LESS THAN SIX (6) INCHES.
4) WIDTH – 12 FOOT MINIMUM, BUT NOT LESS THAN THE FULL WIDTH AT POINTS WHERE INGRESS OR EGRESS OCCURS. 24 FOOT MINIMUM IF SINGLE ENTRANCE TO SITE.
5) GEOTEXTILE – WILL BE PLACED OVER THE ENTIRE AREA PRIOR TO PLACING OF STONE.
6) SURFACE WATER – ALL SURFACE WATER FLOWING OR DIVERTED TOWARD CONSTRUCTION ENTRANCES SHALL BE PIPED BENEATH THE ENTRANCE. IF PIPING IS IMPRACTICAL, A MOUNTABLE BERM WITH 5:1 SLOPES WILL BE PERMITTED.
7) MAINTENANCE – THE ENTRANCE SHALL BE MAINTAINED IN A CONDITION WHICH WILL PREVENT TRACKING OR FLOWING OF SEDIMENT ONTO PUBLIC RIGHTS-OF-WAY. THIS MAY REQUIRE PERIODIC TOP DRESSING WITH ADDITIONAL STONE AS CONDITIONS DEMAND AND REPAIR AND/OR CLEANOUT OF ANY MEASURE USED TO TRAP SEDIMENT. ALL SEDIMENT SPILLED, DROPPED, WASHED OR TRACTED ONTO PUBLIC RIGHTS-OF-WAY MUST BE REMOVED IMMEDIATELY.
8) WHEN WASHING IS REQUIRED, IT SHALL BE DONE ON AN AREA STABILIZED WITH STONE AND WHICH DRAINS INTO AN APPROVED SEDIMENT TRAPPING DEVICE.
9) PERIODIC INSPECTION AND NEEDED MAINTENANCE SHALL BE PROVIDED AFTER EACH RAIN.

STABILIZED CONSTRUCTION ENTRANCE DETAIL
NOT TO SCALE

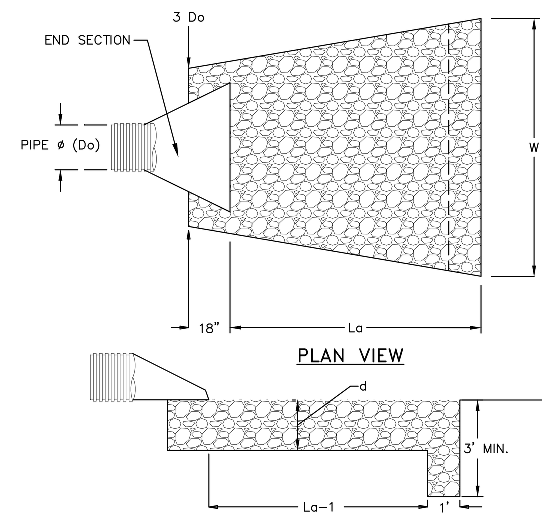

NOTES:
1. SIZING INFORMATION TAKEN FROM FIGURE 3.16 (PAGE 3.42) AND/OR FIGURE 3.17 (PAGE 3.43) OF THE "NEW YORK STANDARDS AND SPECIFICATIONS FOR EROSION AND SEDIMENT CONTROL" 2016 EDITION.
2. RIPRAP SHALL BE COMPOSED OF A WELL-GRADED MIXTURE OF STONE SIZE SO THAT 50% OF THE PIECES SHALL BE LARGER, BY WEIGHT, THAN THE SPECIFIED d50. THE LARGEST STONE SIZE SHALL BE 1.5 TIMES d50.
3. THE MINIMUM THICKNESS OF THE RIPRAP LAYER SHALL BE 1.5 TIMES THE MAXIMUM STONE DIAMETER FOR d50 OF 15 INCHES OR LESS; AND 1.2 TIMES THE MAXIMUM STONE SIZE FOR d50 GREATER THAN 15 INCHES.
4. A LAYER OF FILTER FABRIC (THICKNESS 20-60 MILS, GRAB STRENGTH 90-120 LBS, SHALL CONFORM TO ASTM D-1777 AND ASTM D-1682) SHALL BE PLACED BETWEEN THE RIPRAP AND THE UNDERLYING SOIL SURFACE. FILTER FABRIC SHALL HAVE A MINIMUM 1' OVERLAP AT ALL SEEMS.

ROCK OUTLET PROTECTION DETAIL
NOT TO SCALE

OUTLET PIPE ID	PIPE ø	3Do	W	La	d	d50 RIPRAP SIZE
ES 2	12 INCHES	3 FEET	7 FEET	6 FEET	9 INCHES	4 INCHES

ROCK OUTLET PROTECTION TABLE
NOT TO SCALE

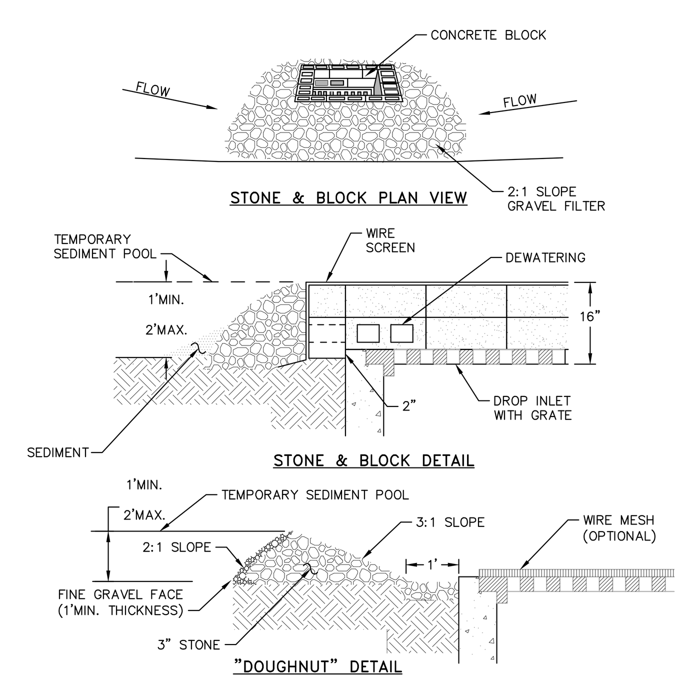

NOTES:
1. LAY ONE BLOCK ON EACH SIDE OF THE STRUCTURE ON ITS SIDE FOR DEWATERING. FOUNDATION SHALL BE 2 INCHES MINIMUM BELOW REST OF INLET AND BLOCKS SHALL BE PLACED AGAINST INLET FOR SUPPORT.
2. HARDWARE CLOTH OR 1/2" WIRE MESH SHALL BE PLACED OVER BLOCK OPENINGS TO SUPPORT STONE.
3. USE CLEAN STONE OR GRAVEL 1/2-3/4 INCH IN DIAMETER PLACED 2 INCHES BELOW TOP OF THE BLOCK ON A 2:1 SLOPE OR FLATTER.
4. FOR STONE STRUCTURES ONLY, A 1 FOOT THICK LAYER OF THE FILTER STONE WILL BE PLACED AGAINST THE 3 INCH STONE AS SHOWN ON THE DRAWINGS. MAXIMUM DRAINAGE AREA 1 ACRE

CATCH BASIN INLET PROTECTION DETAIL
NOT TO SCALE

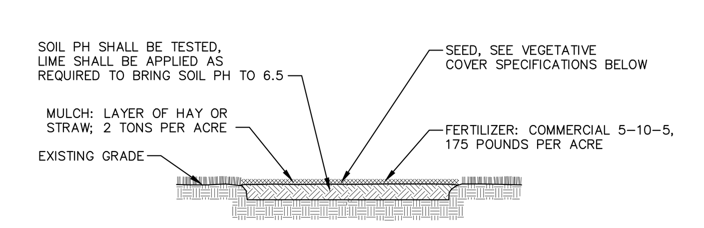

NOTES:
1. TOPSOIL, SEED, MULCH, AND FERTILIZE DISTURBED SOIL AREAS THAT WILL BE LEFT EXPOSED FOR 14 DAYS OR MORE.
2. SEED MIXTURE FOR USE ON LAWNS IN SUNNY AREAS:
   - 65% KENTUCKY BLUE GRASS BLEND — 114 POUNDS PER ACRE
   - 20% PERENNIAL RYEGRASS — 35 POUNDS PER ACRE
   - 15% FINE FESCUE — 26 POUNDS PER ACRE
   - 175 POUNDS PER ACRE
3. SEED MIXTURE FOR USE IN SHADY AREAS:
   - 80% BLEND OF SHADE TOLERANT KENTUCKY BLUEGRASS — 138 POUNDS PER ACRE
   - 20% FINE FESCUE — 37 POUNDS PER ACRE
   - 175 POUNDS PER ACRE
4. SEED BETWEEN APRIL 1ST AND MAY 15TH OR AUGUST 15TH AND OCTOBER 15TH. SEEDING MAY OCCUR BETWEEN MAY 15TH AND AUGUST 15TH IF ADEQUATE IRRIGATION IS PROVIDED.
5. TOPSOIL SHALL HAVE AT LEAST 6% BY WEIGHT OF FINE TEXTURED STABLE ORGANIC MATERIAL, AND NO GREATER THAN 20%. TOPSOIL SHALL HAVE NOT LESS THAN 20% FINE TEXTURED MATERIAL (PASSING THE NO. 200 SIEVE) AND NOT MORE THAN 15% CLAY.

TOPSOIL, SEED AND MULCH DETAIL
NOT TO SCALE

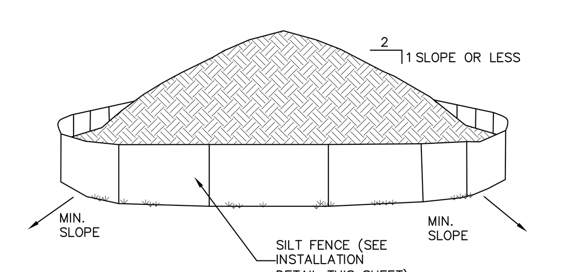

NOTES:
1. AREA CHOSEN FOR STOCKPILING OPERATIONS SHALL BE DRY AND STABLE.
2. EACH PILE SHALL BE SURROUNDED WITH SILT FENCING, THEN STABILIZED WITH VEGETATION OR COVERED.

TEMPORARY SOIL STOCKPILE DETAIL
NOT TO SCALE

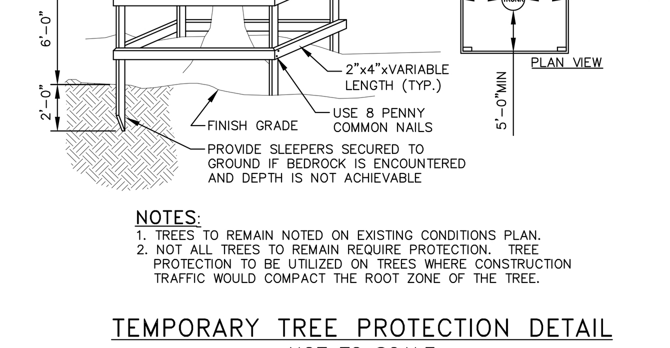

NOTES:
1. TREES TO REMAIN NOTED ON EXISTING CONDITIONS PLAN.
2. NOT ALL TREES TO REMAIN REQUIRE PROTECTION. TREE PROTECTION TO BE UTILIZED ON TREES WHERE CONSTRUCTION TRAFFIC WOULD COMPACT THE ROOT ZONE OF THE TREE.

TEMPORARY TREE PROTECTION DETAIL
NOT TO SCALE

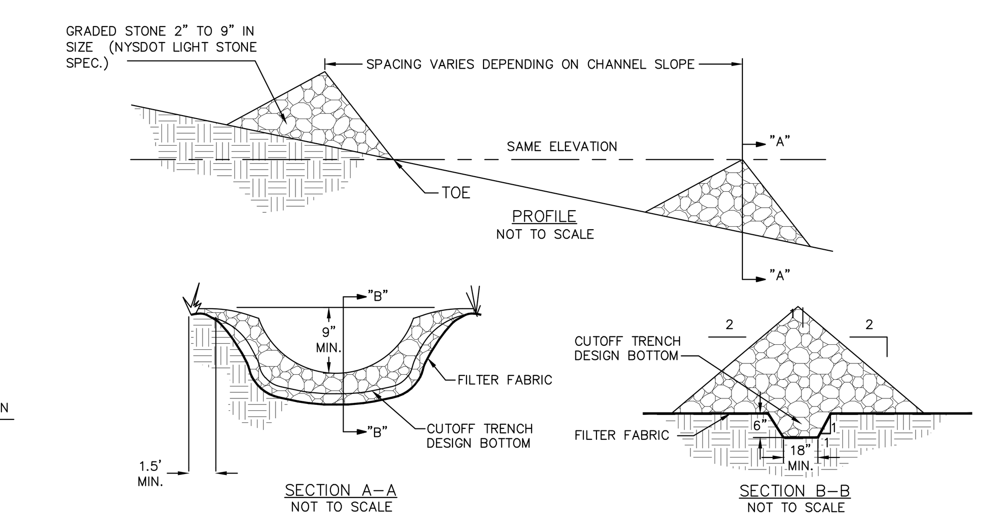

NOTES:
1. SET SPACING OF CHECK DAMS TO ASSUME THAT THE ELEVATIONS OF THE CREST OF THE DOWN STREAM DAM IS AT THE SAME ELEVATION OF THE TOE OF THE UPSTREAM DAM.
2. EXTEND THE STONE A MINIMUM OF 1.5 FEET BEYOND THE DITCH BANKS TO PREVENT CUTTING AROUND THE DAM.
3. PROTECT THE CHANNEL DOWNSTREAM OF THE LOWEST CHECK DAM FROM SCOUR AND EROSION WITH STONE OR LINER AS APPROPRIATE.
4. ENSURE THE CHANNEL APPURTENANCES SUCH AS CULVERT ENTRANCES BELOW CHECK DAMS ARE NOT SUBJECT TO DAMAGE OR BLOCKAGE FROM DISPLACED STONES.
5. CHECKS DAMS SHALL BE INSPECTED AFTER EACH RUNOFF EVENT AND ALL DAMAGE THAT OCCURS SHALL BE CORRECTED IMMEDIATELY.
6. REMOVE SEDIMENT ACCUMULATION BEHIND THE CHECK DAM AS REQUIRED TO ALLOW CHANNEL TO DRAIN THROUGH THE STONE CHECK DAM AND PREVENT LARGE FLOWS FROM CARRYING SEDIMENT OVER THE DAM.

STONE CHECK DAM DETAIL
NOT TO SCALE

LANDSCAPING DETAILS

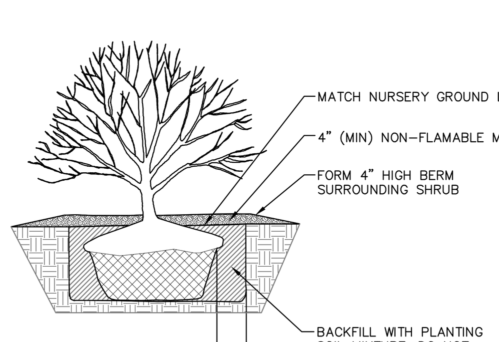

NOTE
1. WATER PER NURSERY SPECIFICATIONS IMMEDIATELY FOLLOWING PLANTING.
2. DETAIL IS FOR BOTH BALL & BURLAPPED OR CONTAINERED SHRUBS.

SHRUB PLANTING DETAIL
NOT TO SCALE

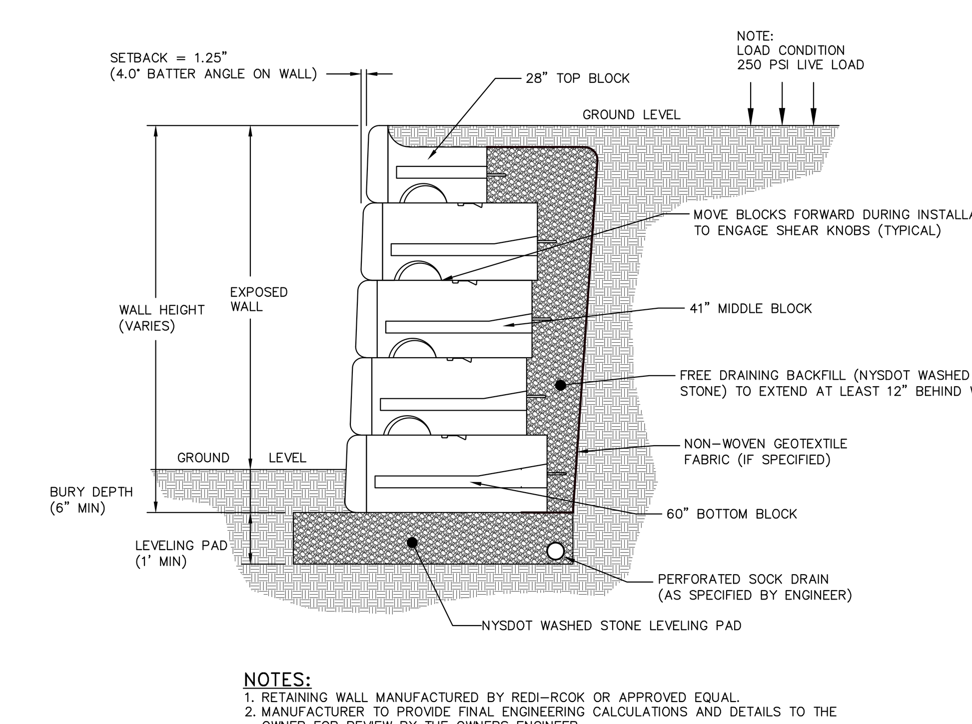

NOTES:
1. RETAINING WALL MANUFACTURED BY REDI-RCOK OR APPROVED EQUAL.
2. MANUFACTURER TO PROVIDE FINAL ENGINEERING CALCULATIONS AND DETAILS TO THE OWNER FOR REVIEW BY THE OWNERS ENGINEER.
3. SEE MANUFACTURER'S DETAILS AND INSTALLATION GUIDELINES FOR FURTHER REQUIREMENTS.

TYPICAL REDI-ROCK GRAVITY WALL WITH 41" BLOCKS
NOT TO SCALE

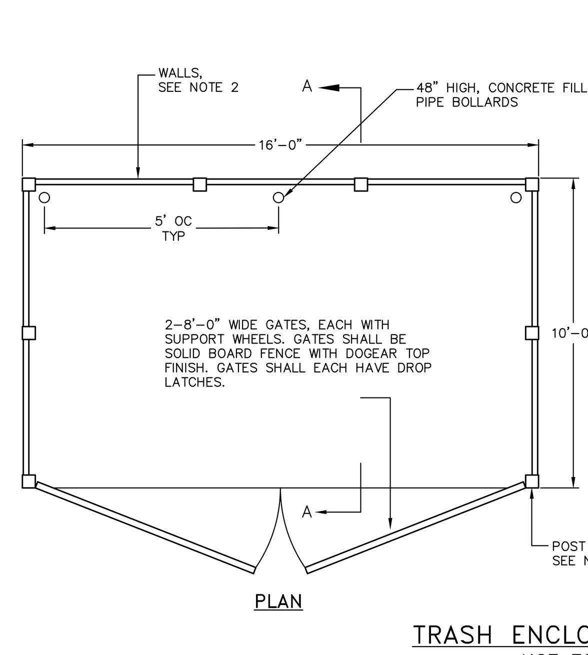

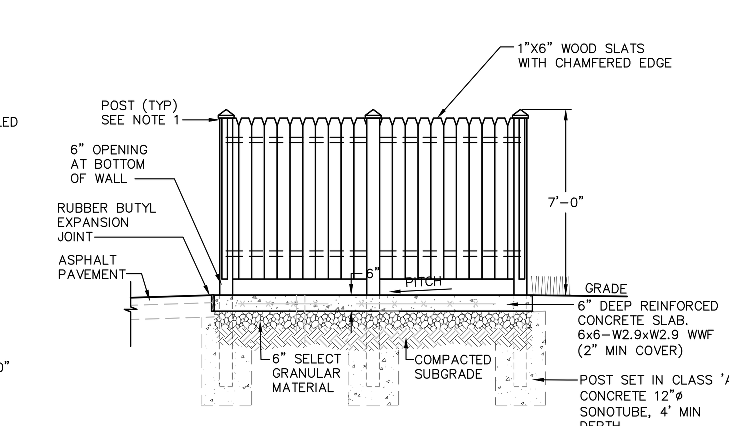

NOTES
1. POSTS SHALL HAVE A DECORATIVE CAP, CONSISTENT WITH THE ARTS & CRAFTS STYLE, AS APPROVED BY OWNER. POST SPACING SHALL BE AS REQUIRED BY WALL CONSTRUCTION.
2. WALLS OF DUMPSTER ENCLOSURE SHALL BE A SOLID WOOD PRIVACY FENCING NATURAL STAIL OR PAINT TO COMPLEMENT BUILDING.

TRASH ENCLOSURE DETAILS
NOT TO SCALE

APPROVED BY RESOLUTION OF THE PLANNING BOARD OF THE CITY OF BEACON, NEW YORK, ON THE

______________ DAY OF ________________, 20_______, SUBJECT TO ALL REQUIREMENTS AND CONDITIONS OF SAID RESOLUTION. ANY CHANGE, ERASURE, MODIFICATION OR REVISION OF THIS PLAT, AS APPROVED, SHALL VOID THIS APPROVAL.

SIGNED THIS ________________ DAY OF _____________, 20____, BY

___________________________ CHAIRMAN

___________________________ SECRETARY

IN ABSENCE OF THE CHAIRMAN OR SECRETARY, THE ACTING CHAIRMAN OR ACTING SECRETARY RESPECTIVELY MAY SIGN IN THIS PLACE.

SEAL

JON D. BODENDORF, P.E.
NYS LICENSE NO. 076245
DANIEL G. KOEHLER, P.E.
NYS LICENSE NO. 082716

REVISIONS:

NO.	DATE	DESCRIPTION	BY
1	8/29/2017	PER PLANNING BOARD COMMENTS	DGK

Site, Landscaping and Erosion & Sediment Control Details

Sheet 9 of 11

Owner:
River Ridge Views, LLC
445 Main Street
Beacon, NY 12508

Architect:
Aryeh Siegel, Architect
84 Mason Circle
Beacon, New York 12508

Site / Civil Engineer:
Hudson Land Design
174 Main Street
Beacon, New York 12508

Surveyor:
TEC Land Surveying, P.C.
15C Tioronda Avenue
Beacon, New York 12508

River Ridge Townhouses
Beacon, New York
Scale: As Noted
July 25, 2017