SITE DETAILS

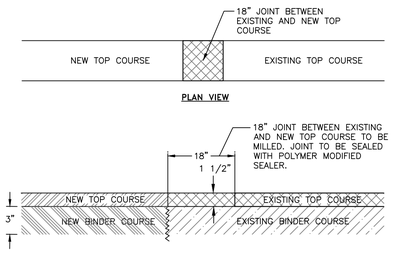

NOTES:
1. 3" BINDER COURSE AND 1½" TOP COURSE TO BE USED FOR RESTORATION OF PAVEMENT WITHIN CITY ROADS.
2. EXCAVATIONS ARE TO BE SAW CUT SMOOTH, ALL EDGES TACK COATED, AND ALL SEAMS SEALED WITH A HOT POLYMER MODIFIED CRACK SEALANT.
3. IF EXISTING ASPHALT PAVEMENT DEPTH IS GREATER THAN THE PROPOSED ASPHALT PAVEMENT SECTION, INCREASE PROPOSED ASPHALT BINDER THICKNESS TO MATCH EXISTING.

MILLED KEYWAY DETAIL
NOT TO SCALE

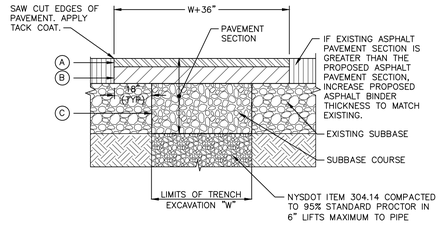

LEGEND
- (A) 1-1/2" ASPHALT CONCRETE TOP COURSE– NYSDOT TYPE 6F
- (B) 3" ASPHALT CONCRETE BINDER COURSE– NYSDOT TYPE 3
- (C) 10" GRANULAR SUBBASE COURSE– NYSDOT ITEM 304.14

NOTES:
1. SAW CUT MIN. 18" BEYOND EXCAVATION WITH SMOOTH EDGES. 18" JOINT BETWEEN EXISTING AND NEW TOP COURSE TO BE MILLED. JOINT TO BE SEALED WITH POLYMER MODIFIED SEALER.
2. FURNISH, PLACE, AND COMPACT SUBBASE.
3. TACK COAT IN ACCORDANCE WITH NYSDOT STANDARD SPEC.
4. FURNISH AND PLACE ASPHALT CONCRETE PAVEMENT AS SPECIFIED.

STREET PAVEMENT RESTORATION DETAIL
NOT TO SCALE

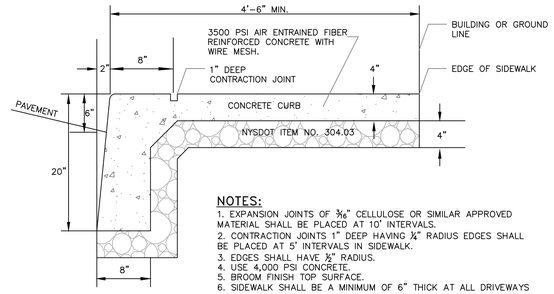

NOTES:
1. EXPANSION JOINTS OF 3/8" CELLULOSE OR SIMILAR APPROVED MATERIAL SHALL BE PLACED AT 10' INTERVALS.
2. CONTRACTION JOINTS 1" DEEP HAVING ¼" RADIUS EDGES SHALL BE PLACED AT 5' INTERVALS IN SIDEWALK.
3. EDGES SHALL HAVE ½" RADIUS.
4. USE 4,000 PSI CONCRETE.
5. BROOM FINISH TOP SURFACE.
6. SIDEWALK SHALL BE A MINIMUM OF 6" THICK AT ALL DRIVEWAYS AND HANDICAP RAMPS.
7. MAXIMUM SLOPE OF 1 ON 12 TO BE USED WHERE SIDEWALK TERMINATES AT HANDICAP RAMPS.

MONOLITHIC CURB AND SIDEWALK DETAIL
NOT TO SCALE

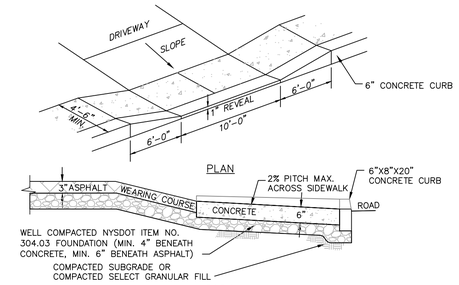

NOTE:
1. PRE-MOLDED EXPANSION JOINTS TO BE USED AT ALL JOINTS.
2. DRIVEWAY SHALL BE PAVED AFTER THE CONCRETE APRON TO THE RIGHT-OF-WAY LINE (MINIMUM).
3. SIDEWALK WIDTH SHALL MATCH EXISTING SIDEWALK, BUT NO LESS THAN 4'-6".

ONE WAY DRIVEWAY ENTRANCE DETAIL
NOT TO SCALE

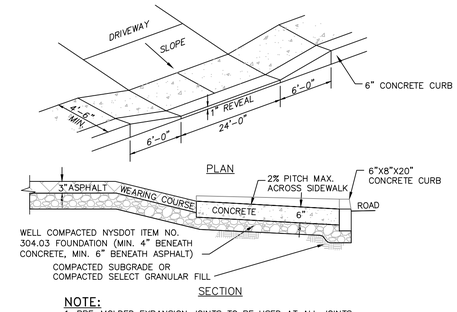

NOTE:
1. PRE-MOLDED EXPANSION JOINTS TO BE USED AT ALL JOINTS.
2. DRIVEWAY SHALL BE PAVED AFTER THE CONCRETE APRON TO THE RIGHT-OF-WAY LINE (MINIMUM).
3. SIDEWALK WIDTH SHALL MATCH EXISTING SIDEWALK, BUT NO LESS THAN 4'-6".

TWO WAY DRIVEWAY ENTRANCE DETAIL
NOT TO SCALE

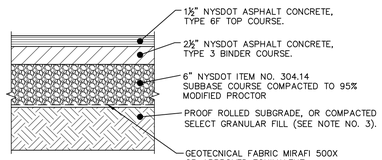

NOTES:
1. MATERIALS AND METHODS OF CONSTRUCTION SHALL BE IN CONFORMANCE WITH THE NEW YORK STATE DEPARTMENT OF TRANSPORTATION (NYSDOT) STANDARD SPECIFICATIONS FOR CONSTRUCTION AND MATERIALS, DATED JANUARY 2, 2002.
2. TACK COAT WHEN SPECIFIED OR CALLED OUT IN THESE DRAWINGS OR REQUIRED BY THE REFERENCED SPECIFICATIONS SHALL CONFORM WITH SECTION 407–TACK COAT OF THE ABOVE REFERENCED NYSDOT STANDARD SPECIFICATIONS.
3. WHERE IT IS NECESSARY TO PLACE FILL FOR PURPOSES OF BRINGING THE SUBGRADE ELEVATION UP TO A SPECIFIED GRADE, THE FILL MATERIAL PLACED SHALL BE IN CONFORMANCE WITH SECTION 203–EXCAVATION AND EMBANKMENT OF THE ABOVE REFERENCED NYSDOT STANDARD SPECIFICATIONS.

PARKING AREA SECTION DETAIL
NOT TO SCALE

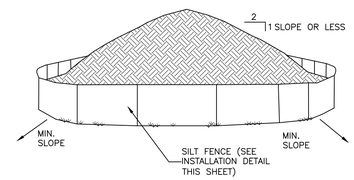

NOTES:
1. AREA CHOSEN FOR STOCKPILING OPERATIONS SHALL BE DRY AND STABLE.
2. EACH PILE SHALL BE SURROUNDED WITH SILT FENCING, THEN STABILIZED WITH VEGETATION OR COVERED.

TEMPORARY SOIL STOCKPILE DETAIL
NOT TO SCALE

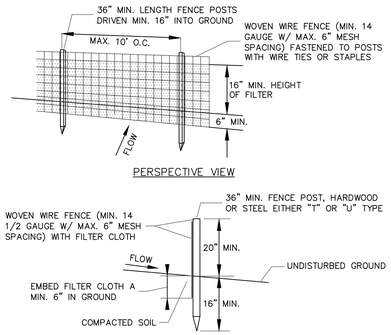

NOTES:
1. FILTER CLOTH TO BE FASTENED SECURELY TO WOVEN WIRE FENCE WITH TIES SPACED EVERY 24" AT TOP AND MID SECTION.
2. WHEN TWO SECTIONS OF FILTER CLOTH ADJOIN EACH OTHER THEY SHALL BE OVER-LAPPED BY SIX INCHES AND FOLDED. FILTER CLOTH SHALL BE EITHER FILTER X, MIRAFI 100X, STABILINKA T140N OR APPROVED EQUAL.
3. PREFABRICATED UNITS SHALL BE GEOFAB, ENVIROFENCE OR APPROVED EQUAL.
4. MAINTENANCE SHALL BE PERFORMED AS NEEDED AND MATERIAL REMOVED WHEN "BULGES" DEVELOP IN THE SILT FENCE.

SILT FENCE DETAIL
NOT TO SCALE

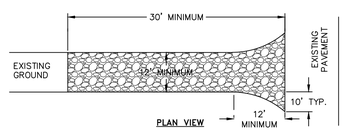

NOTES:
1) STONE SIZE – USE 1–4 INCH STONE, OR RECLAIMED OR RECYCLED CONCRETE EQUIVALENT.
2) LENGTH – NOT LESS THAN 30 FEET FOR A SINGLE RESIDENCE LOT.
3) THICKNESS – NOT LESS THAN SIX (6) INCHES.
4) WIDTH – 12 FOOT MINIMUM, BUT NOT LESS THAN THE FULL WIDTH AT POINTS WHERE INGRESS OR EGRESS OCCURS. 24 FOOT MINIMUM IF SINGLE ENTRANCE TO SITE.
5) GEOTEXTILE – WILL BE PLACED OVER THE ENTIRE AREA PRIOR TO PLACING OF STONE.
6) SURFACE WATER – ALL SURFACE WATER FLOWING OR DIVERTED TOWARD CONSTRUCTION ENTRANCES SHALL BE PIPED BENEATH THE ENTRANCE. IF PIPING IS IMPRACTICAL, A MOUNTABLE BERM WITH 5:1 SLOPES WILL BE PERMITTED.
7) MAINTENANCE – THE ENTRANCE SHALL BE MAINTAINED IN A CONDITION WHICH WILL PREVENT TRACKING OR FLOWING OF SEDIMENT ONTO PUBLIC RIGHTS-OF-WAY. THIS MAY REQUIRE PERIODIC TOP DRESSING WITH ADDITIONAL STONE AS CONDITIONS DEMAND AND REPAIR AND/OR CLEANOUT OF ANY MEASURE USED TO TRAP SEDIMENT. ALL SEDIMENT SPILLED, DROPPED, WASHED OR TRACTED ONTO PUBLIC RIGHTS-OF-WAY MUST BE REMOVED IMMEDIATELY.
8) WHEN WASHING IS REQUIRED, IT SHALL BE DONE ON AN AREA STABILIZED WITH STONE AND WHICH DRAINS INTO AN APPROVED SEDIMENT TRAPPING DEVICE.
9) PERIODIC INSPECTION AND NEEDED MAINTENANCE SHALL BE PROVIDED AFTER EACH RAIN.

STABILIZED CONSTRUCTION ENTRANCE DETAIL
NOT TO SCALE

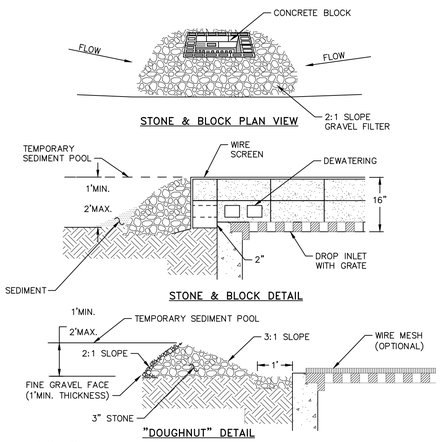

NOTES:
1. LAY ONE BLOCK ON EACH SIDE OF THE STRUCTURE ON ITS SIDE FOR DEWATERING. FOUNDATION SHALL BE 2 INCHES MINIMUM BELOW REST OF INLET AND BLOCKS SHALL BE PLACED AGAINST INLET FOR SUPPORT.
2. HARDWARE CLOTH OR 1/2" WIRE MESH SHALL BE PLACED OVER BLOCK OPENINGS TO SUPPORT STONE.
3. USE CLEAN STONE OR GRAVEL 1/2–3/4 INCH IN DIAMETER PLACED 2 INCHES BELOW TOP OF THE BLOCK ON A 2:1 SLOPE OR FLATTER.
4. FOR STONE STRUCTURES ONLY, A 1 FOOT THICK LAYER OF THE FILTER STONE WILL BE PLACED AGAINST THE 3 INCH STONE AS SHOWN ON THE DRAWINGS. MAXIMUM DRAINAGE AREA 1 ACRE

CATCH BASIN INLET PROTECTION DETAIL
NOT TO SCALE

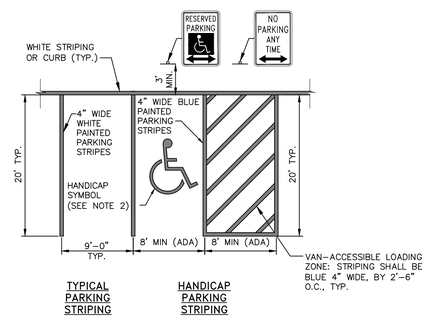

NOTES:
1. ALL DIMENSIONS SUBJECT TO CURRENT MUNICIPALITY ZONING AND SITE REGULATIONS.
2. PAINTED HANDICAP SYMBOL TO BE IN ACCORDANCE WITH NYSDOT AND ADA STANDARDS.
3. IF PARKING ABUTS A SIDEWALK, THEN THE REGULATORY SIGNS SHALL BE PLACED BEHIND THE SIDEWALK.

PARKING AND STRIPING DETAIL
NOT TO SCALE

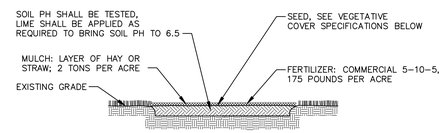

NOTES:
1. TOPSOIL, SEED, MULCH, AND FERTILIZE DISTURBED SOIL AREAS THAT WILL BE LEFT EXPOSED FOR 14 DAYS OR MORE.
2. SEED MIXTURE FOR USE ON LAWNS IN SUNNY AREAS:

65% KENTUCKY BLUE GRASS BLEND	114 POUNDS PER ACRE
20% PERENNIAL RYEGRASS	35 POUNDS PER ACRE
15% FINE FESCUE	26 POUNDS PER ACRE
	175 POUNDS PER ACRE

3. SEED MIXTURE FOR USE IN SHADY AREAS:

80% BLEND OF SHADE TOLERANT KENTUCKY BLUEGRASS	138 POUNDS PER ACRE
20% FINE FESCUE	37 POUNDS PER ACRE
	175 POUNDS PER ACRE

4. SEED BETWEEN APRIL 1ST AND MAY 15TH OR AUGUST 15TH AND OCTOBER 15TH. SEEDING MAY OCCUR BETWEEN MAY 15TH AND AUGUST 15TH IF ADEQUATE IRRIGATION IS PROVIDED.
5. TOPSOIL SHALL HAVE AT LEAST 6% BY WEIGHT OF FINE TEXTURED STABLE ORGANIC MATERIAL, AND NO GREATER THAN 20%. TOPSOIL SHALL HAVE NOT LESS THAN 20% FINE TEXTURED MATERIAL (PASSING THE NO. 200 SIEVE) AND NOT MORE THAN 15% CLAY.

TOPSOIL, SEED AND MULCH DETAIL
NOT TO SCALE

DRAWN BY: CMB				CHECKED BY: MAB			
REVISIONS:				REVISIONS:			
NO.	DATE	DESCRIPTION	BY	NO.	DATE	DESCRIPTION	BY

Dig Safely. New York — Call 811 before you dig

STATE OF NEW YORK — MICHAEL A. BODENDORF — 084466 — LICENSED PROFESSIONAL ENGINEER

SEAL

HUDSON LAND DESIGN
HUDSON LAND DESIGN
PROFESSIONAL ENGINEERING P.C.
174 MAIN ST., BEACON, NEW YORK 12508
13 CHAMBERS ST., NEWBURGH, NEW YORK 12550
PH: 845-440-6926
F: 845-440-6637

CONSTRUCTION DETAILS

416 MAIN STREET

416-420 MAIN STREET
CITY OF BEACON
DUTCHESS COUNTY, NEW YORK
TAX ID: 6054-29-056780 & 056774

JOB #:	2020:005
DATE:	4/28/2020
SCALE:	NTS
TITLE:	CD-1
SHEET:	9 OF 10

UNAUTHORIZED ALTERATIONS OR ADDITIONS TO THIS DRAWING IS A VIOLATION OF SECTION 7209.2 OF THE NEW YORK EDUCATION LAW