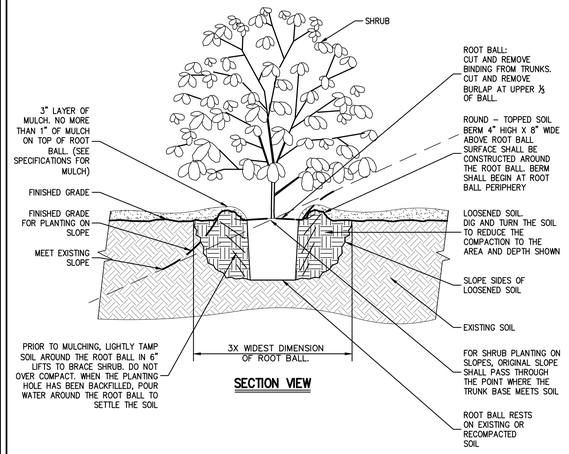

SECTION VIEW

NOTES:

1. ALL PLANTING BEDS SHALL BE FREE OF WEEDS AND GRASS PRIOR TO AND FOLLOWING INSTALLATION OF PLANTS.
2. PLANTS IN CONTAINERS MUST HAVE THE FIBROUS ROOTS PULLED APART.
3. PROPOSED PLANT MATERIAL SHALL BEAR THE SAME RELATION TO FINISHED GRADE AS IT BORE TO PREVIOUS EXISTING GRADE.

SHRUB PLANTING 45

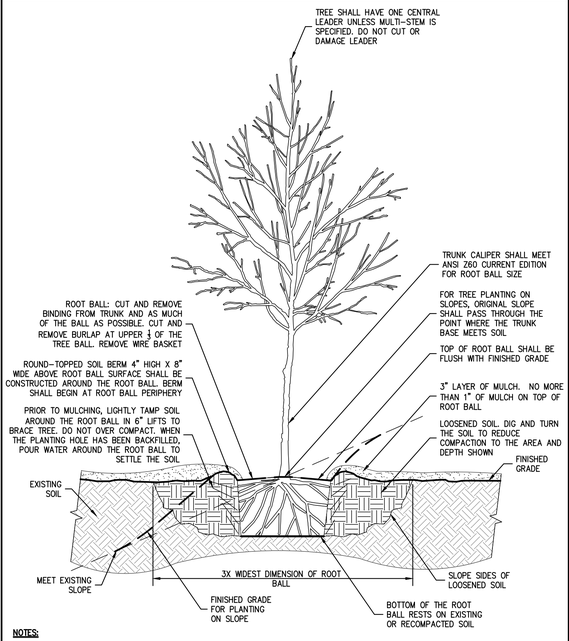

NOTES:

1. ALL PLANTING BEDS SHALL BE FREE OF WEEDS AND GRASS PRIOR TO AND FOLLOWING INSTALLATION OF PLANTS.
2. PLANTS IN CONTAINERS MUST HAVE THE FIBROUS ROOTS PULLED APART.
3. PROPOSED PLANT MATERIAL SHALL BEAR THE SAME RELATION TO FINISHED GRADE AS IT BORE TO PREVIOUS EXISTING GRADE.
4. SEE TREE STAKING DETAIL IF STAKING IS REQUIRED.

TREE PLANTING
(DECIDUOUS AND EVERGREEN) 46

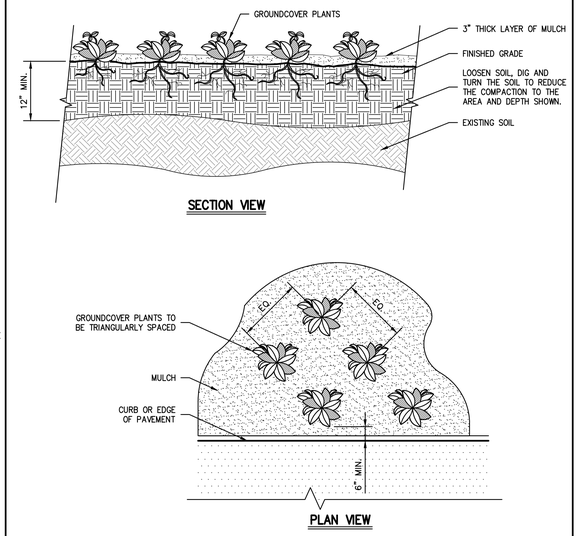

NOTES:

1. SEE PLANTING PLAN FOR GROUNDCOVER SPECIES, SIZE, AND SPACING DIMENSION.
2. SETTLE SOIL AROUND ROOT BALL OF EACH GROUNDCOVER PLANT PRIOR TO MULCHING.
3. ALL PLANTING BEDS SHALL BE FREE OF WEEDS AND GRASS PRIOR TO AND FOLLOWING INSTALLATION OF PLANTS.
4. PLANTS IN CONTAINERS MUST HAVE THE FIBROUS ROOTS PULLED APART.
5. PROPOSED PLANT MATERIAL SHALL BEAR THE SAME RELATION TO FINISHED GRADE AS IT BORE TO PREVIOUS EXISTING GRADE.

GROUNDCOVER 47

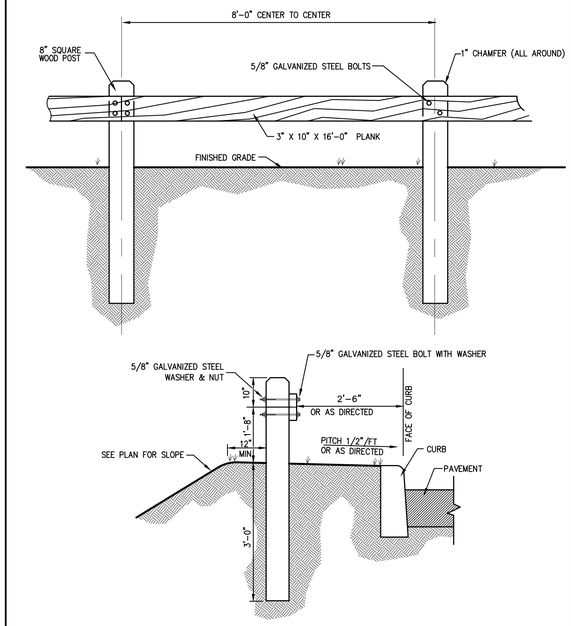

NOTES

1. ALL WOOD TO BE SEASONED NO.1 DOUGLAS FIR, SOUTHERN PINE OR OTHER APPROVED STRUCTURAL LUMBER.
2. GALVANIZED BOLT AND NUT TO BE 4000# MIN., 5400# MAX. TENSILE STRENGTH. AFTER GALVANIZING BOLT AND NUT, THE NUT SHALL BE FREE RUNNING ON THE BOLT.

WOOD GUIDE RAIL 48

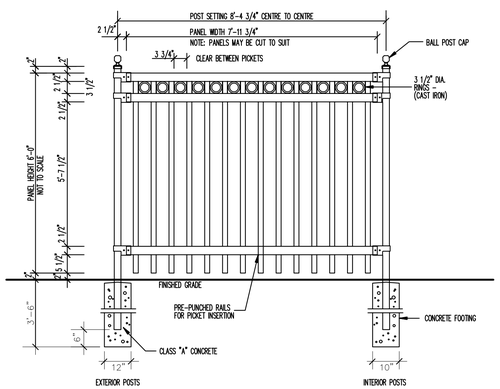

SPECIFICATIONS:

POSTS, RAILS : & PICKETS	COLD FORMED STEEL TUBING INTERIOR & EXTERIOR GALVALUME™ COATING CHROMATE CONVERSION COATING ELECTROSTATICALLY APPLIED THERMALLY BONDED POLYESTER POWDER COATING MINIMUM FILM THICKNESS 2.5 mils	PICKETS:	3/4" x 1 1/2", 16 GAUGE
POSTS:	3"x3", 14 GAUGE OR SCH 40 POST SPACING (CENTRE TO CENTRE): 8'–4 3/4"	FITTINGS:	12 GAUGE STAMP FORGED FACTORY FINISH AS ABOVE
POST FLANGES:	8"x8" x 1/2" 10"x10" x 1/2"	WELDS:	STAINLESS STEEL
POST CAP:	BALL	PANEL:	WIDTH OF 7'–11 3/4" HEIGHT OF 6'
RAILS:	1 1/2" x 2 1/2", 16 GAUGE	COLOUR:	BLACK
		WARRANTY:	5 YEAR MAINTENANCE FREE

FENCE TO BE SILVER EAGLE C/W RINGS AS MANUFACTURED BY IRON EAGLE INDUSTRIES, INC. OF MISSISSAUGA, ONTARIO OR APPROVED EQUAL.

BLACK ALUMINUM FENCE 49

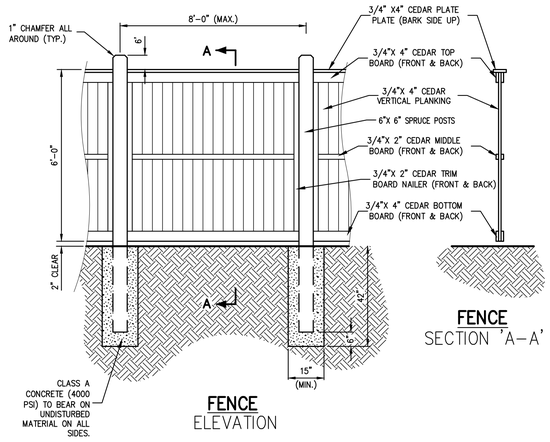

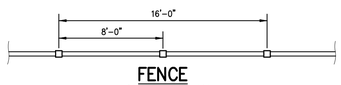

FENCE PLAN VIEW

NOTES:

1. METAL FLANGES, CLEATS, BOLTS, SCREWS, ETC. SHALL BE STAINLESS STEEL OR GALVANIZED STEEL.
2. ALL LUMBER, EXCEPT WHERE NOTED ON FENCE, TO BE PRESSURE TREATED WITH WOOD PRESERVATIVE FOR IN GROUND USE. ALL LUMBER TO BE #1 GRADE.
3. SEE SITE LAYOUT PLAN FOR LOCATION.

WOODEN FENCE 50

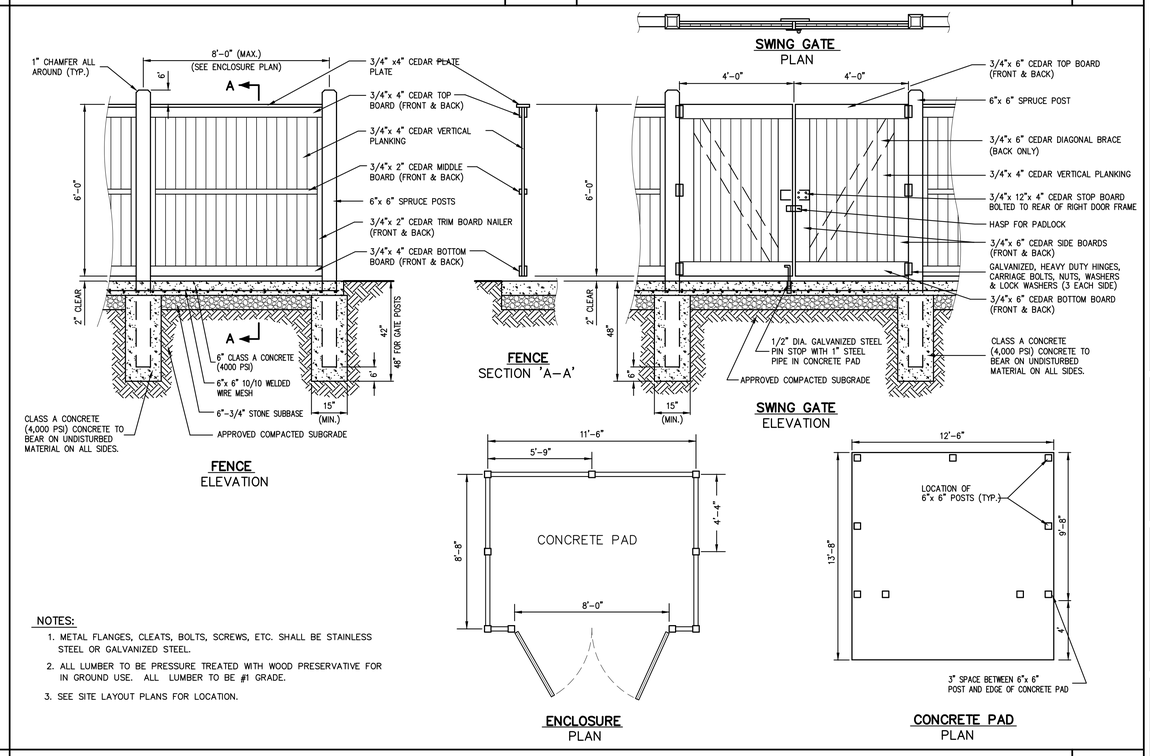

NOTES:

1. METAL FLANGES, CLEATS, BOLTS, SCREWS, ETC. SHALL BE STAINLESS STEEL OR GALVANIZED STEEL.
2. ALL LUMBER TO BE PRESSURE TREATED WITH WOOD PRESERVATIVE FOR IN GROUND USE. ALL LUMBER TO BE #1 GRADE.
3. SEE SITE LAYOUT PLANS FOR LOCATION.

TRASH ENCLOSURE WITH CONCRETE PAD
(WOOD) 51

No.	Revision	Date
1.	REVISED PER CITY COMMENTS	12/30/19

Previous Editions Obsolete

JMC Planning, Engineering, Landscape Architecture & Land Surveying, PLLC
JMC Site Development Consultants, LLC
John Meyer Consulting, Inc.
120 BEDFORD ROAD • ARMONK, NY 10504
voice 914.273.5225 • fax 914.273.2102
www.jmcpllc.com

CONSTRUCTION DETAILS

BEACON COMMONS
16 WEST MAIN STREET
BEACON, NY 12508

ANY ALTERATION OF PLANS, SPECIFICATIONS, PLATS AND REPORTS BEARING THE SEAL OF A LICENSED PROFESSIONAL ENGINEER OR LICENSED LAND SURVEYOR IS A VIOLATION OF SECTION 7209 OF THE NEW YORK STATE EDUCATION LAW, EXCEPT AS PROVIDED FOR BY SECTION 7209, SUBSECTION 2.

Drawn:	AH	Approved:	SS
Scale:	NOT TO SCALE		
Date:	10/29/2019		
Project No:	18119		
18119–DETAILS	C–906	–	

Drawing No: C–906
(Sheet 20 of 24)

NOT FOR CONSTRUCTION

COPYRIGHT © 2019 by JMC. All Rights Reserved. No part of this document may be reproduced, stored in a retrieval system, or transmitted in any form or by means, electronic, mechanical, photocopying, recording or otherwise, without the prior written permission of JMC PLANNING, ENGINEERING, LANDSCAPE ARCHITECTURE & LAND SURVEYING, PLLC | JMC SITE DEVELOPMENT CONSULTANTS, LLC | JOHN MEYER CONSULTING, INC. (JMC). Any modifications or alterations to this document without the written permission of JMC shall render them invalid and unusable.