LEGEND:

- EXISTING SEWER MANHOLE
- EXISTING LAMP
- EXISTING WATER VALVE
- EXISTING SEWER SERVICE LINE
- EXISTING STORMWATER LINE
- PROPOSED STORMWATER LINE
- PROPOSED FORCE MAIN
- PROPOSED ROOF LEADER PIPE
- IMPERVIOUS SURFACE
- PROPOSED ROOF LEADER LOCATION
- PROPOSED STORMWATER CLEANOUT

STORMWATER UTILITY PLAN

SCALE: 1" = 10'

GRAPHIC SCALE

10 0 5 10 20 40

(IN FEET)
1 inch = 10 ft.

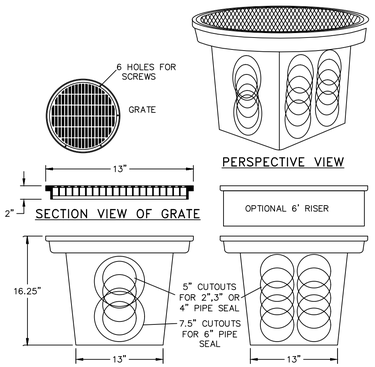

PROFILE VIEW

NOTES:
1. YARD DRAIN TO BE MODEL DB-POLY20DIA FROM WOODARDS CONCRETE PRODUCTS, 629 LYBOLT ROAD BULLVILLE, NY 10915.

POLYETHYLENE YARD DRAIN DETAIL

NOT TO SCALE

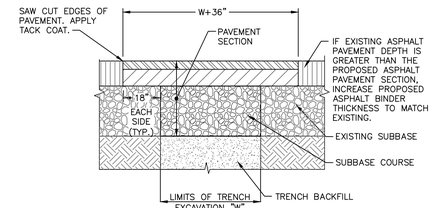

NOTES:
1. SAW CUT AS INDICATED, 18" BEYOND EXCAVATION.
2. FURNISH, PLACE, AND COMPACT SUBBASE.
3. TACK COAT IN ACCORDANCE WITH NYSDOT STANDARD SPEC.
4. FURNISH AND PLACE ASPHALT CONCRETE PAVEMENT AS SPECIFIED.

PAVEMENT RESTORATION DETAIL

NOT TO SCALE

PROJECT INFORMATION:

PARCEL OWNER:	FIELD PROPERTIES LLC., 36 WINSTON LANE GARRISON, NY 10524
ENGINEER OF RECORD:	HUDSON LAND DESIGN P.C., 174 MAIN STREET, BEACON NY 12508
PROJECT LOCATION:	296 MAIN STREET BEACON, NY 12508
TAX PARCEL ID:	5954-36-933866
PARCEL AREA:	±0.124 ACRES
ZONING DISTRICT:	(CMS) CENTRAL MAIN STREET
POTABLE WATER SUPPLY:	MUNICIPAL
SEWAGE DISPOSAL:	MUNICIPAL

INSPECTION SCHEDULE & LONG TERM MAINTENANCE OF STORMWATER STRUCTURES

CATCH BASINS AND PIPING:

ALL CATCH BASINS SHALL BE INSPECTED AFTER EACH STORM EVENT FOR SEDIMENT ACCUMULATION, AND DEBRIS, AND REMOVE AS NECESSARY. WHEN SEDIMENT ACCUMULATION WITHIN THE CATCH BASIN SUMP REACHES 1/2 OF THE SUMP DEPTH, IT SHALL BE REMOVED. ASSOCIATED PIPING SHALL BE INSPECTED ANNUALLY AND ACCUMULATED SEDIMENT SHALL BE REMOVED AS NEEDED.

EXISTING STORM AND SEWER NOTES

1. EXISTING STORM AND SEWER LINE LOCATIONS AND ELEVATIONS SHOWN ON THIS PLAN WERE TAKEN FROM FIELLD MEASURMENTS, GIS INFORMATION AND OBSERVATIONS BY HUDSON LAND DESIGN, AND HAVE NOT BEEN VERIFIED BY THE PROJECT SURVEYOR. THEREFORE, THE LOCATIONS AND ELEVATIONS SHOULD BE CONSIDERED APPROXIMATE.

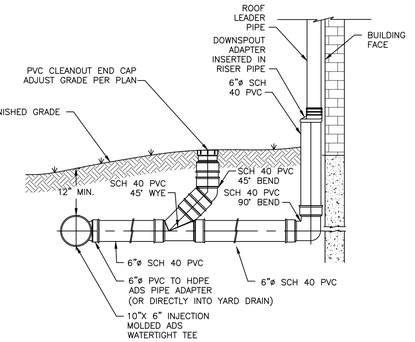

NOTES:
1. ALL ROOF LEADER PIPES SHALL BE 6"ø SCH 40 PVC @ 2.0% SLOPE MIN. UNLESS SPECIFIED OTHERWISE.
2. PVC JOINT CONNECTIONS SHALL BE MADE WITH PVC CEMENT.
3. ROOF LEADER HEADER PIPES SHALL BE 10"ø HDPE PIPE.
4. SUBSTITUTIONS OF PIPE MATERIAL SHALL BE BROUGHT TO THE DESIGN ENGINEER'S ATTENTION FOR REVIEW.

ROOF LEADER CONNECTION DETAIL

NOT TO SCALE

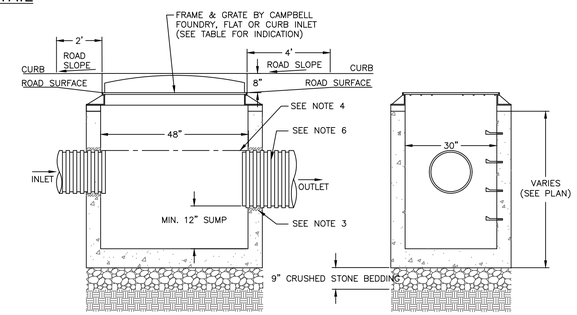

NOTES:
1. PRECAST CONCRETE CATCH BASIN WITH CONCRETE STRENGTH OF 4,000 PSI @ 28 DAYS.
2. THE ENDS OF ALL PIPES SHALL BE CUT OFF FLUSH WITH THE INSIDE SURFACE OF THE CATCH BASIN AND PARGED AROUND.
3. PIPES SHALL BE PARGED AROUND INTERIOR AND EXTERIOR PRIOR TO BACKFILLING OF STRUCTURE. CONNECTIONS MADE WITHIN 10 FEET OF A WATER MAIN (OR SERVICE LINE) OR A SEWER MAIN (OR SERVICE LATERAL) SHALL BE MADE WATERTIGHT.
4. PROVIDE A MINIMUM 0.1' DROP BETWEEN INLET AND OUTLET INVERTS (MATCH CROWNS FOR PIPES WITH DIFFERENT SIZE) UNLESS OTHERWISE NOTED ON THE PLAN.
5. CATCH BASINS WITH AN INTERIOR DEPTH OF 4' AND GREATER SHALL BE FURNISHED WITH STEEL REINFORCED POLYPROPYLENE PLASTIC STEPS AT 12" INTERVALS.
6. HDPE PIPE SHALL BE PROVIDED WITH WATERTIGHT CONNECTIONS. ADS MODEL N12 WT IB OR APPROVED EQUAL.

CATCH BASIN DETAIL

NOT TO SCALE

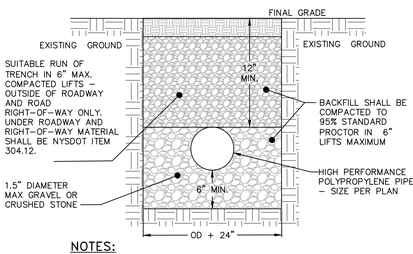

NOTES:
1. EXCAVATION AND TRENCHING SHALL MEET ALL OSHA REQUIREMENTS.

STORM LINE TRENCH DETAIL

NOT TO SCALE

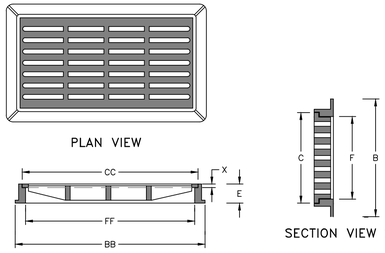

DIMENSION TABLE:

B	C	E	F	X	BB	CC	FF
30"	24"	4"	22"	1"	41"	36"	34"

NOTES:
1. HEAVY DUTY RECTANGULAR STORMWATER INLET GRATE TO BE CAMPBELL FOUNDRY MODEL 3433, OR APPROVED EQUAL.

CAST IRON STORMWATER FLAT INLET GRATE DETAIL

NOT TO SCALE

DRAWN BY: CMB				CHECKED BY: MAB			
REVISIONS:				REVISIONS:			
NO.	DATE	DESCRIPTION	BY	NO.	DATE	DESCRIPTION	BY
1	9/24/19	PER PLANNING BOARD COMMENTS	CMB				

STATE OF NEW YORK · MICHAEL A. BODENKOPF · 084495 · LICENSED PROFESSIONAL ENGINEER

SEAL

HUDSON LAND DESIGN
PROFESSIONAL ENGINEERING P.C.
174 MAIN ST., BEACON, NEW YORK 12508
13 CHAMBERS ST., NEWBURGH, NEW YORK 12550
PH: 845-440-6926
F: 845-440-6637

STORMWATER UTILITY PLAN

HAPPY VALLEY ARCADE

296 MAIN STREET
CITY OF BEACON
DUTCHESS COUNTY, NEW YORK
TAX ID: 5954-27-869916 (± 0.09 AC.)

JOB #:	2019:035
DATE:	08/27/19
SCALE:	1" = 10'
TITLE:	SUP-1
SHEET:	4 OF 4

UNAUTHORIZED ALTERATIONS OR ADDITIONS TO THIS DRAWING IS A VIOLATION OF SECTION 7209.2 OF THE NEW YORK EDUCATION LAW