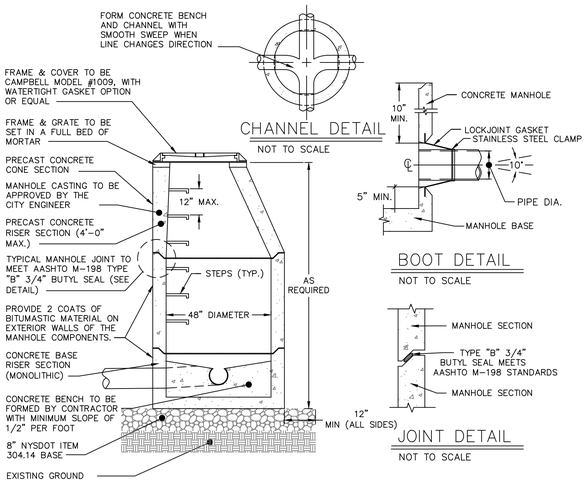

NOTES:

1. PIPE CONNECTION TO BE STANDARD "LOCKJOINT" BOOT 5" OFF BASE OF MANHOLE (SEE DETAIL).
2. CONCRETE STRENGTH OF MANHOLE COMPONENTS TO BE 4000 PSI @ 28 DAYS IN ACCORDANCE WITH ASTM C-478-86.
3. STEEL REINFORCMENT OF MANHOLE COMPONENTS TO MEET ASTM A615-A497 REQUIREMENTS.
4. LOADING OF MANHOLE COMPONENTS TO MEET H-20 REQUIREMENTS.
5. CONCRETE USED IN MANHOLE COMPONENTS TO CONTAIN 6% AIR ENTRAINMENT.
6. 4' MAXIMUM FROM MANHOLE TO PIPE JOINT.

PRE-CAST CONCRETE SANITARY MANHOLE DETAIL
NOT TO SCALE

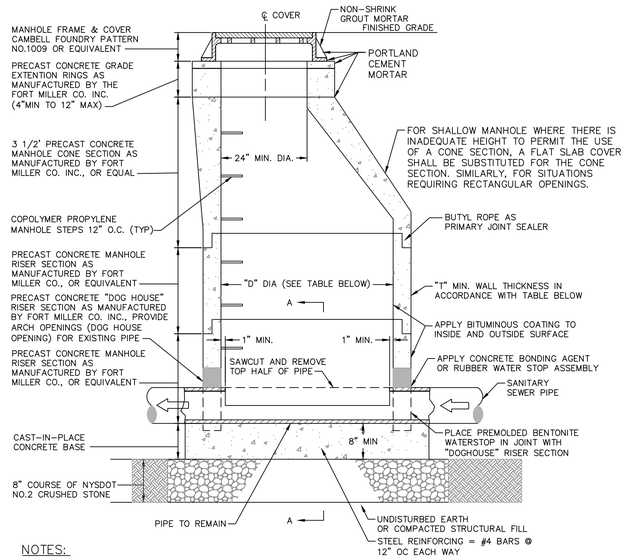

NOTES:

1. USE ONLY WET-CAST UNITS. DRY-CAST NOT ACCEPTABLE.
2. MANUFACTURER TO VERIFY REQUIRED "T" DIMENSION ASSOCIATED WITH DEPTH OF INDIVIDUAL MANHOLES.

TABLE

OUTLET SEWER PIPE SIZE	"D" DIA MIN	"T" WALL THICKNESS MIN
8" THRU 24"	4'-0"	5"
30"	5'-0"	6"

PRECAST CONCRETE INSERTION "DOGHOUSE" MANHOLE DETAIL
NOT TO SCALE

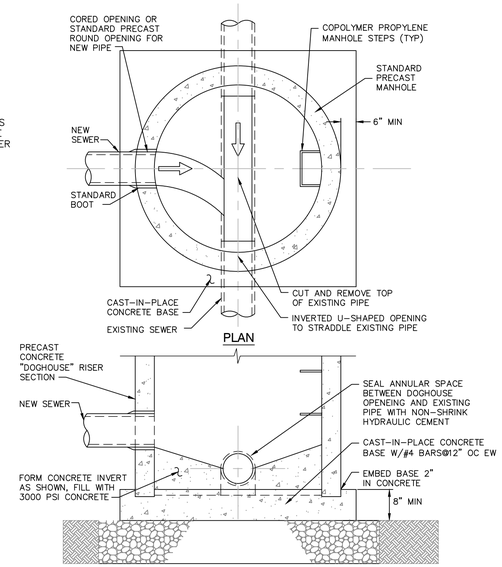

SANITARY SEWER NOTES:

1. THE PROPOSED APARTMENTS ARE TO BE SERVED BY THE CITY OF BEACON MUNICIPAL SEWER SYSTEM. INSTALLATION OF ALL COMPONENTS SHALL BE PERFORMED IN ACCORDANCE WITH THE REQUIREMENTS OF THE CITY CODE, CHAPTER 179.
2. REFER TO THE DUTCHESS COUNTY DEPARTMENT OF HEALTH STANDARD NOTES FOR ADDITIONAL PERTINENT INFORMATION.
3. THE DUTCHESS COUNTY DEPARTMENT OF HEALTH, CITY OF BEACON CHIEF SEWER OPERATOR, AND THE CERTIFYING PROFESSIONAL ENGINEER SHALL BE NOTIFIED PRIOR TO COMMENCEMENT OF THE SEWER MAIN INSTALLATION.
4. SEWER MAIN MATERIAL SHALL BE 8" DIAMETER SDR-35 OR SDR-26 PVC BELL AND SPIGOT GRAVITY SEWER PIPE, WITH GASTIGHT AND WATERTIGHT JOINTS.
5. SEWER MAIN SHALL BE LAID IN STRAIGHT ALIGNMENT. MANHOLES SHALL BE CONSTRUCTED AT ALL CHANGES IN SLOPE, ALIGNMENT OR AT INTERVALS NOT EXCEEDING 400 LINEAR FEET. STRAIGHT ALIGNMENT SHALL BE VERIFIED BY DEFLECTION TESTING.
6. THE SEWER MAIN SHALL BE INSTALLED AND TESTED FOR EXFILTRATION PRIOR TO BEING PERMITTED TO OPERATE. ALL NEW SANITARY SEWER GRAVITY LINES SHALL PASS A LOW PRESSURE AIR TEST IN ACCORDANCE WITH ASTM C-828 AT A PRESSURE OF 3.5 PSI.
7. MANHOLES SHALL BE VACUUM TESTED IN ACCORDANCE WITH ASTM C-1244. IF PRESSURE DROP EXCEEDS THE SPECIFIED AMOUNT, THE NECESSARY REPAIRS OR REPLACEMENTS REQUIRED SHALL BE MADE TO REDUCE THE PRESSURE DROP TO WITHIN THE SPECIFIED LIMIT, AND THE TESTS SHALL BE REPEATED UNTIL THE REQUIREMENT IS MET.
8. SERVICE LATERALS SHALL BE 4" DIAMETER SDR-35 PVC WITH A MINIMUM SLOPE OF 2%, UNLESS OTHERWISE NOTED ON THE PLAN.
9. ALL SANITARY SEWER MAINS AND MANHOLES UP TO, BUT NOT INCLUDING, THE EXISTING MANHOLE SHALL BE OWNED, OPERATED AND MAINTAINED BY THE HOMEOWNERS ASSOCIATION.

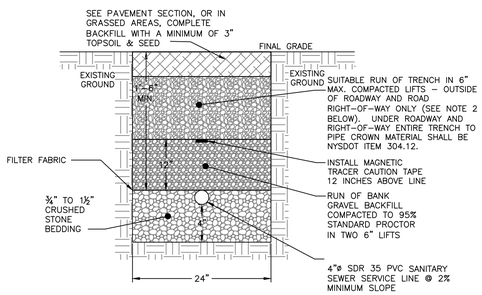

NOTES:

1. EXCAVATION AND TRENCHING SHALL MEET ALL OSHA REQUIREMENTS.
2. SUITABLE RUN OF TRENCH SHALL NOT INCLUDE FROZEN MATERIALS, DEBRIS, ORGANIC MATERIALS, LARGE STONES OR OTHER UNSUITABLE MATERIALS. IF THE RUN OF TRENCH MATERIAL IS FOUND TO BE UNSUITABLE, A SUITABLE BACKFILL MATERIAL SHALL BE IMPORTED AND USED.

SANITARY SEWER SERVICE LINE TRENCH DETAIL
NOT TO SCALE

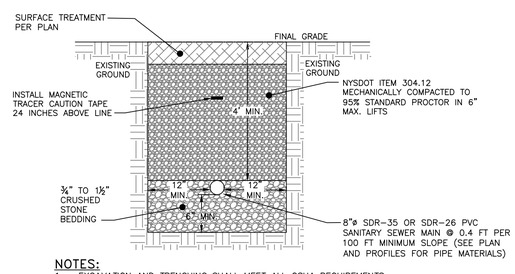

NOTES:

1. EXCAVATION AND TRENCHING SHALL MEET ALL OSHA REQUIREMENTS.
2. SEWER MAIN MATERIAL SHALL BE 8 DIAMETER SDR-26 PVC BELL AND SPIGOT GRAVITY SEWER PIPE, WITH GASTIGHT AND WATERTIGHT JOINTS.

SANITARY SEWER MAIN TRENCH DETAIL
NOT TO SCALE

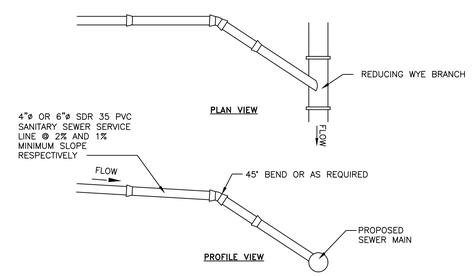

NOTES:

1. EXCAVATION AND TRENCHING SHALL MEET ALL OSHA REQUIREMENTS.
2. SUITABLE RUN OF TRENCH SHALL NOT INCLUDE FROZEN MATERIALS, DEBRIS, ORGANIC MATERIALS, LARGE STONES OR OTHER UNSUITABLE MATERIALS. IF THE RUN OF TRENCH MATERIAL IS FOUND TO BE UNSUITABLE, A SUITABLE BACKFILL MATERIAL SHALL BE IMPORTED AND USED.

SANITARY SEWER SERVICE CONNECTION DETAIL
NOT TO SCALE

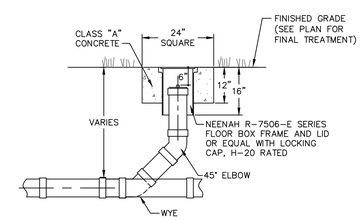

CLEANOUT DETAIL
NOT TO SCALE

DRAWN BY: CMB				CHECKED BY: MAB			
REVISIONS:				REVISIONS:			
NO.	DATE	DESCRIPTION	BY	NO.	DATE	DESCRIPTION	BY
2	3/26/19	ADDED SHEET	CMB				
3	4/30/19	PER PLANNING BOARD COMMENTS	CMB				
4	5/28/19	PER PLANNING BOARD COMMENTS	ESR				

STATE OF NEW YORK · MICHAEL A. BODENKOPF · 084465 · LICENSED PROFESSIONAL ENGINEER

SEAL

HUDSON LAND DESIGN
HUDSON LAND DESIGN
PROFESSIONAL ENGINEERING P.C.
174 MAIN ST., BEACON, NEW YORK 12508
13 CHAMBERS ST., NEWBURGH, NEW YORK 12550
PH: 845-440-6926
F: 845-440-6637

SEWER DETAILS

53 ELIZA STREET

53 ELIZA STREET
CITY OF BEACON
DUTCHESS COUNTY, NEW YORK
TAX ID: 6054-29-031870

JOB #: 2018:032
DATE: 8/28/18
SCALE: AS NOTED
TITLE: CD-4
SHEET: 13 OF 13

UNAUTHORIZED ALTERATIONS OR ADDITIONS TO THIS DRAWING IS A VIOLATION OF SECTION 7209.2 OF THE NEW YORK EDUCATION LAW