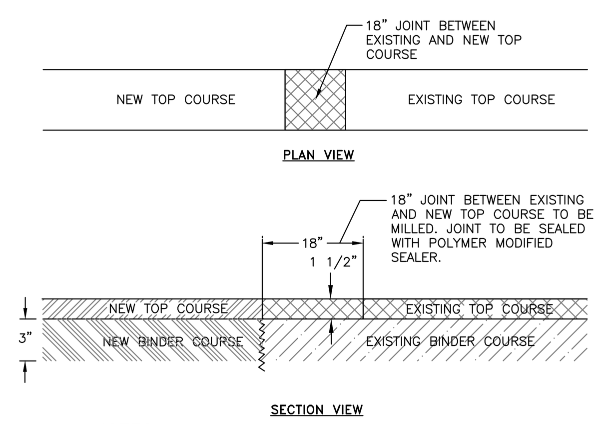

NOTES:
1. 3" BINDER COURSE AND 1½" TOP COURSE TO BE USED FOR RESTORATION OF PAVEMENT WITHIN CITY ROADS.
2. EXCAVATIONS ARE TO BE SAW CUT SMOOTH, ALL EDGES TACK COATED, AND ALL SEAMS SEALED WITH A HOT POLYMER MODIFIED CRACK SEALANT.
3. IF EXISTING ASPHALT PAVEMENT DEPTH IS GREATER THAN THE PROPOSED ASPHALT PAVEMENT SECTION, INCREASE PROPOSED ASPHALT BINDER THICKNESS TO MATCH EXISTING.

MILLED KEYWAY DETAIL
NOT TO SCALE

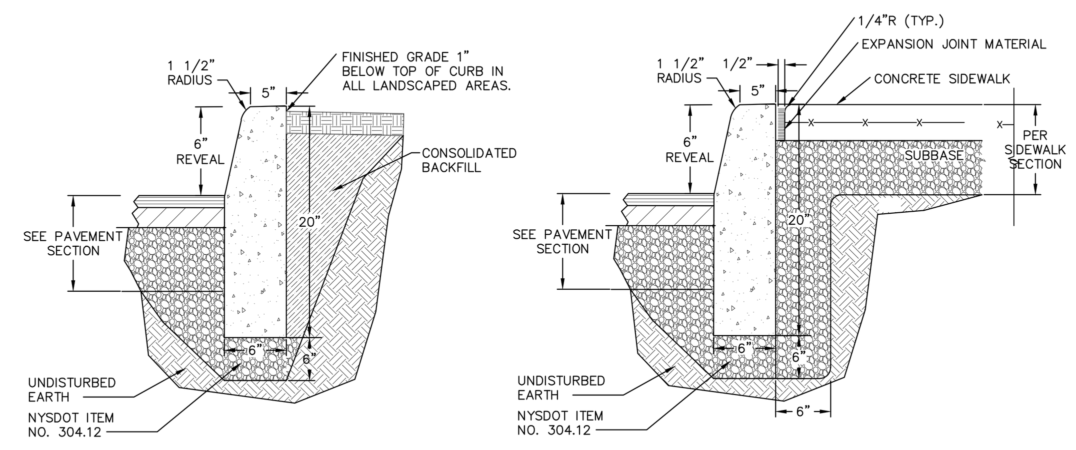

NOTES:
1. CONCRETE CURB SHALL BE 4,000 PSI CAST-IN-PLACE, AND IN ACCORDANCE WITH NYSDOT STANDARD SPECIFICATION SECTION 609.
2. EXPANSION JOINTS OF 1/2" CELLULOSE OR SIMILAR MATERIAL SHALL BE PLACED AT 10 FOOT INTERVALS.
3. FOR MOUNTABLE CURBS ABUTTING SIDEWALK OR OTHER HARDSCAPE, REFER TO "ABUTTING SIDEWALK" DETAIL.

CAST-IN-PLACE CONCRETE CURB DETAIL
NOT TO SCALE

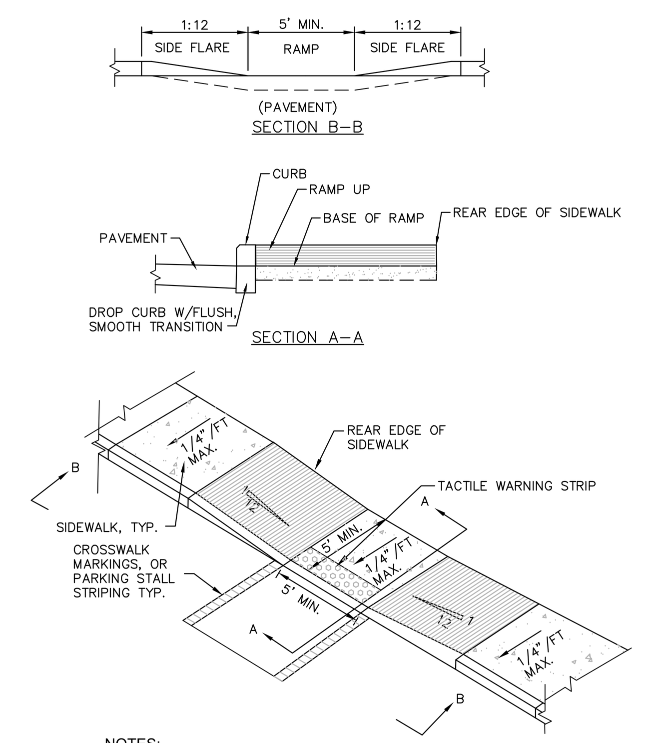

NOTES:
1. ALL WORK SHALL CONFORM WITH THE NYSDOT STANDARD SPECIFICATION FOR CONSTRUCTION AND MATERIALS DATED, JANUARY 2, 2002 AND ALL ADDENDA THERETO; SPECIFICALLY SECTION 608– SIDEWALKS, DRIVEWAYS, AND BICYCLE PATHS.
2. SLOPE RAMP AND SIDE FLARES AS INDICATED IN THE PLANS OR AS ORDERED BY THE ENGINEER.
3. TACTILE WARNING STRIPS SHALL BE PROVIDED ON ALL RAMPS IN ACCORDANCE W/ ADA REQUIREMENTS.

DROP CURB RAMP DETAIL
NOT TO SCALE

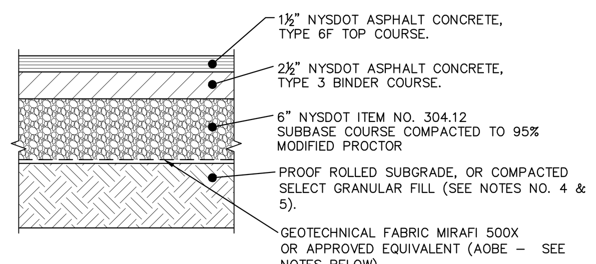

NOTES:
1. MATERIALS AND METHODS OF CONSTRUCTION SHALL BE IN CONFORMANCE WITH THE NEW YORK STATE DEPARTMENT OF TRANSPORTATION (NYSDOT) STANDARD SPECIFICATIONS FOR CONSTRUCTION AND MATERIALS, LATEST REVISION.
2. SUBGRADE SHALL NOT INCLUDE FROZEN MATERIALS, DEBRIS, ORGANIC MATERIALS, LARGE STONES OR OTHER UNSUITABLE MATERIALS.
3. TACK COAT WHEN SPECIFIED OR CALLED OUT IN THESE DRAWINGS OR REQUIRED BY THE REFERENCED SPECIFICATIONS SHALL CONFORM WITH SECTION 407–TACK COAT OF THE ABOVE REFERENCED NYSDOT STANDARD SPECIFICATIONS.
4. WHERE IT IS NECESSARY TO PLACE FILL FOR PURPOSES OF BRINGING THE SUBGRADE ELEVATION UP TO A SPECIFIED GRADE, THE FILL MATERIAL PLACED SHALL BE IN CONFORMANCE WITH SECTION 203–EXCAVATION AND EMBANKMENT OF THE ABOVE REFERENCED NYSDOT STANDARD SPECIFICATIONS.
5. IT IS EXPECTED THAT THE EXISTING SITE SUB-SOILS ARE SUITABLE. IF UNSUITABLE SOILS ARE ENCOUNTERED DURING CONSTRUCTION, THE CONTRACTOR SHALL CONTACT THE ENGINEER FOR POSSIBLE MODIFICATIONS TO THE PAVEMENT DETAIL.

PAVEMENT SECTION DETAIL
NOT TO SCALE

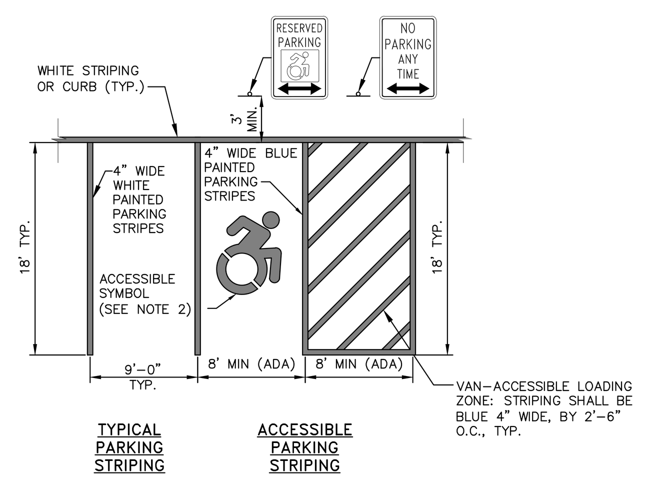

NOTES:
1. ALL DIMENSIONS SUBJECT TO CURRENT MUNICIPALITY ZONING AND SITE REGULATIONS.
2. PAINTED ACCESSIBLE SYMBOL TO BE IN ACCORDANCE WITH NYSDOT AND ADA STANDARDS.
3. IF PARKING ABUTS A SIDEWALK, THEN THE REGULATORY SIGNS SHALL BE PLACED BEHIND THE SIDEWALK.

PARKING AND STRIPING DETAIL
NOT TO SCALE

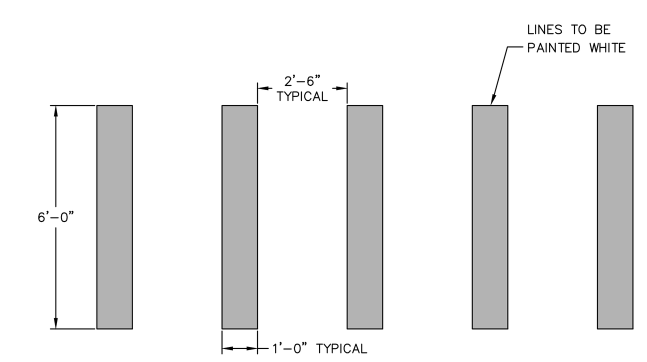

PAINTED CROSSWALK DETAIL
NOT TO SCALE

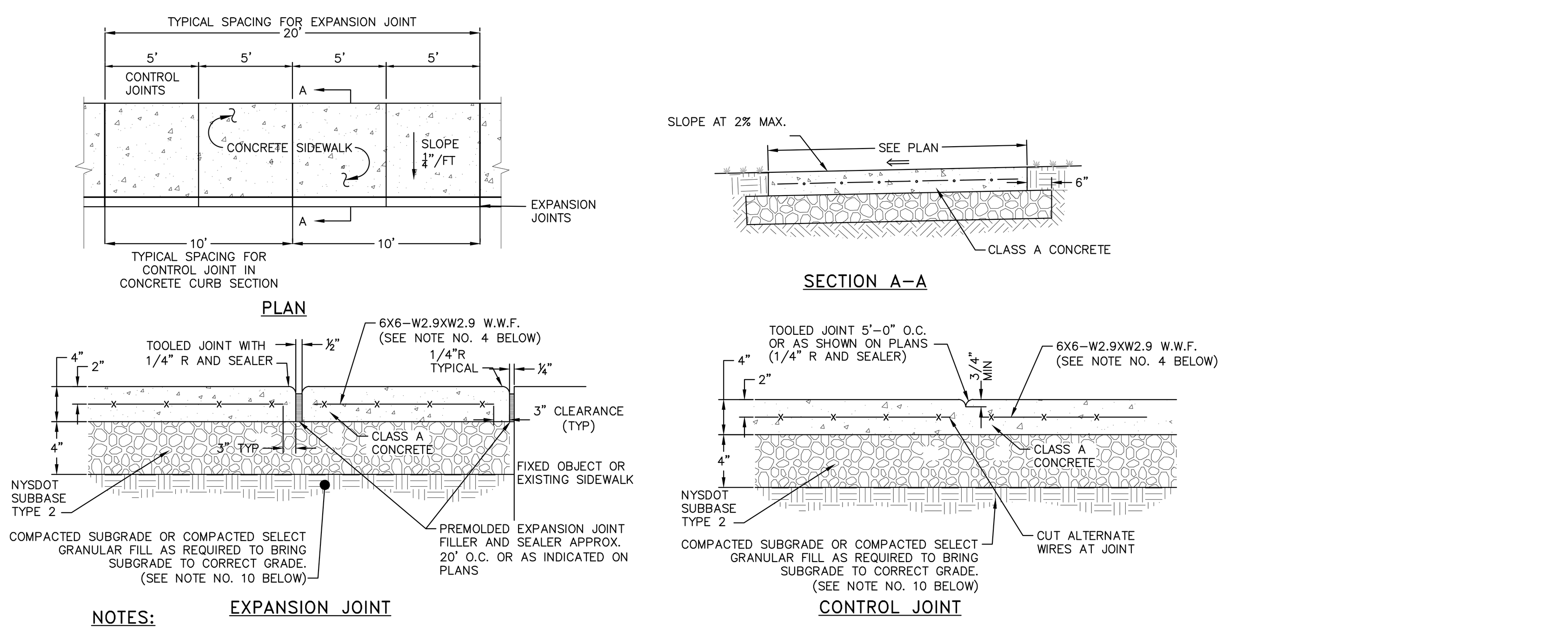

NOTES:
1. 10' SPACING OF CONTROL JOINTS SHALL BE USED FOR CAST IN PLACE CONCRETE CURBS.
2. MATERIAL AND METHODS OF CONSTRUCTION SHALL BE IN CONFORMANCE WITH THE NEW YORK STATE DEPARTMENT OF TRANSPORTATION (NYSDOT) STANDARD SPECIFICATIONS FOR CONSTRUCTION AND MATERIALS, LATEST REVISION.
3. ALL CONCRETE SHALL BE 3,500 PSI CLASS A CONCRETE. CONCRETE MATERIALS, PLACEMENT, AND CONSTRUCTION SHALL CONFORM WITH SECTION 500 OF THE ABOVE REFERENCED NYSDOT STANDARD SPECIFICATIONS.
4. REINFORCING STEEL FOR CONCRETE SHALL CONFORM WITH SECTION 556 – REINFORCING STEEL FOR CONCRETE STRUCTURES OF THE ABOVE REFERENCED NYSDOT STANDARD SPECIFICATIONS AND AS SPECIFICALLY CALLED OUT IN THE DRAWINGS.
5. ALL EXPOSED SURFACED SHALL HAVE A BROOM TEXTURED FINISH.
6. EXPANSION JOINTS SHALL BE LOCATED A MAXIMUM OF 20' ON CENTER, OR AS INDICATED ON PLANS.
7. JOINTS SHALL NOT BE SAW CUT.
8. EXPOSED CONCRETE SURFACES SHALL BE TREATED WITH "SUREBOND"/"SAFEBOND" SB–7000 INTENSIFIER BRIGHT PROTECTOR AND SIDEWALK SEALER, OR EQUAL. RATE AND METHOD OF APPLICATION SHALL BE IN ACCORDANCE WITH MANUFACTURE'S RECOMMENDATIONS.
9. SUBBASE MATERIAL SHALL CONFORM WITH SECTION 304 OF THE ABOVE REFERENCED NYSDOT STANDARD.
10. WHERE IT IS NECESSARY TO PLACE FILL FOR PURPOSE OF BRINGING THE SUBGRADE ELEVATION UP TO A SPECIFIED GRADE, THE FILL MATERIAL PLACED SHALL BE IN CONFORMATION WITH SECTION 203–EXCAVATION AND EMBANKMENT OF THE ABOVE REFERENCED NYSDOT STANDARD SPECIFICATIONS.
11. ALL WORK SHALL CONFORM WITH SECTION 608–SIDEWALK, DRIVEWAYS, AND BICYCLE PATHS OF THE ABOVE REFERENCED NYSDOT STANDARD SPECIFICATIONS.

CONCRETE SIDEWALK DETAIL
NOT TO SCALE

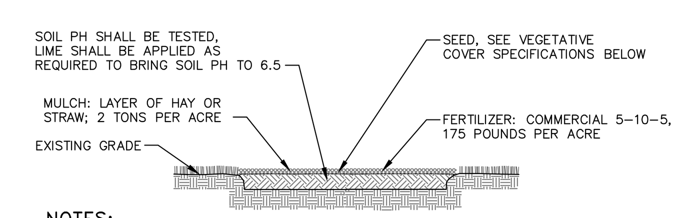

NOTES:
1. TOPSOIL, SEED, MULCH, AND FERTILIZE DISTURBED SOIL AREAS THAT WILL BE LEFT EXPOSED FOR 14 DAYS OR MORE.
2. SEED MIXTURE FOR USE ON LAWNS IN SUNNY AREAS:

65% KENTUCKY BLUE GRASS BLEND	114 POUNDS PER ACRE
20% PERENNIAL RYEGRASS	35 POUNDS PER ACRE
15% FINE FESCUE	26 POUNDS PER ACRE
	175 POUNDS PER ACRE

3. SEED MIXTURE FOR USE IN SHADY AREAS:

80% BLEND OF SHADE TOLERANT KENTUCKY BLUEGRASS	138 POUNDS PER ACRE
20% FINE FESCUE	37 POUNDS PER ACRE
	175 POUNDS PER ACRE

4. SEED BETWEEN APRIL 1ST AND MAY 15TH OR AUGUST 15TH AND OCTOBER 15TH. SEEDING MAY OCCUR BETWEEN MAY 15TH AND AUGUST 15TH IF ADEQUATE IRRIGATION IS PROVIDED.
5. TOPSOIL SHALL HAVE AT LEAST 6% BY WEIGHT OF FINE TEXTURED STABLE ORGANIC MATERIAL, AND NO GREATER THAN 20%. TOPSOIL SHALL HAVE NOT LESS THAN 20% FINE TEXTURED MATERIAL (PASSING THE NO. 200 SIEVE) AND NOT MORE THAN 15% CLAY.

TOPSOIL, SEED AND MULCH DETAIL
NOT TO SCALE

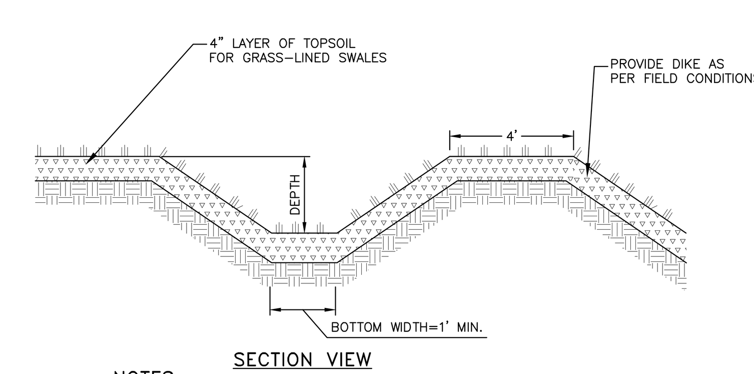

NOTES:
1. MINIMUM 1' DEPTH AND 1' WIDTH FOR ALL SWALES.
2. SWALE SHALL BE SEEDED WITH FAST GERMINATING RYE 15 TO 25 POUNDS PER 1,000 SQUARE FEET AND MULCHED.

GRASS LINED SWALE/DIKE DETAIL
NOT TO SCALE

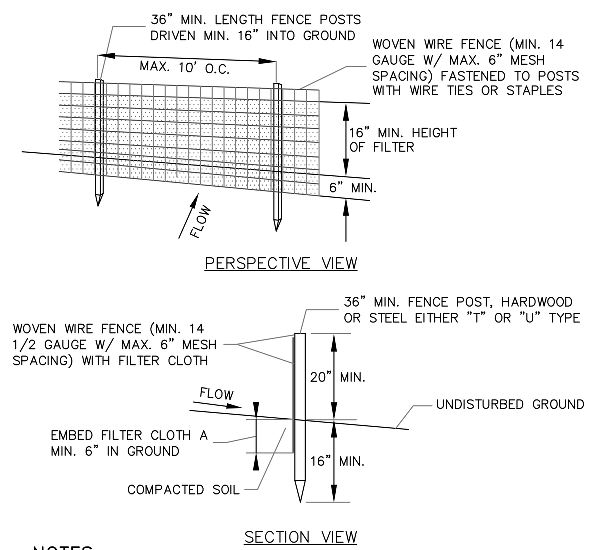

NOTES:
1. FILTER CLOTH TO BE FASTENED SECURELY TO WOVEN WIRE FENCE WITH TIES SPACED EVERY 24" AT TOP AND MID SECTION.
2. WHEN TWO SECTIONS OF FILTER CLOTH ADJOIN EACH OTHER THEY SHALL BE OVER–LAPPED BY SIX INCHES AND FOLDED. FILTER CLOTH SHALL BE EITHER FILTER X, MIRAFI 100X, STABILINKA T140N OR APPROVED EQUAL.
3. PREFABRICATED UNITS SHALL BE GEOFAB, ENVIROFENCE OR APPROVED EQUAL.
4. MAINTENANCE SHALL BE PERFORMED AS NEEDED AND MATERIAL REMOVED WHEN "BULGES" DEVELOP IN THE SILT FENCE.

SILT FENCE DETAIL
NOT TO SCALE

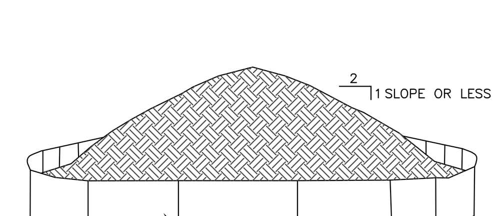

NOTES:
1. AREA CHOSEN FOR STOCKPILING OPERATIONS SHALL BE DRY AND STABLE.
2. EACH PILE SHALL BE SURROUNDED WITH SILT FENCING, THEN STABILIZED WITH VEGETATION OR COVERED.

TEMPORARY SOIL STOCKPILE DETAIL
NOT TO SCALE

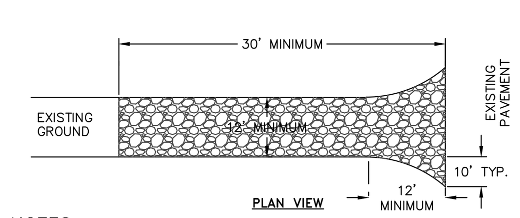

NOTES:
1) STONE SIZE – USE 1–4 INCH STONE, OR RECLAIMED OR RECYCLED CONCRETE EQUIVALENT.
2) LENGTH – NOT LESS THAN 30 FEET FOR A SINGLE RESIDENCE LOT.
3) THICKNESS – NOT LESS THAN SIX (6) INCHES.
4) WIDTH – 12 FOOT MINIMUM, BUT NOT LESS THAN THE FULL WIDTH AT POINTS WHERE INGRESS OR EGRESS OCCURS. 24 FOOT MINIMUM IF SINGLE ENTRANCE TO SITE.
5) GEOTEXTILE – WILL BE PLACED OVER THE ENTIRE AREA PRIOR TO PLACING OF STONE.
6) SURFACE WATER – ALL SURFACE WATER FLOWING OR DIVERTED TOWARD CONSTRUCTION ENTRANCES SHALL BE PIPED BENEATH THE ENTRANCE. IF PIPING IS IMPRACTICAL, A MOUNTABLE BERM WITH 5:1 SLOPES WILL BE PERMITTED.
7) MAINTENANCE – THE ENTRANCE SHALL BE MAINTAINED IN A CONDITION WHICH WILL PREVENT TRACKING OR FLOWING OF SEDIMENT ONTO PUBLIC RIGHTS–OF–WAY. THIS MAY REQUIRE PERIODIC TOP DRESSING WITH ADDITIONAL STONE AS CONDITIONS DEMAND AND REPAIR AND/OR CLEANOUT OF ANY MEASURE USED TO TRAP SEDIMENT. ALL SEDIMENT SPILLED, DROPPED, WASHED OR TRACTED ONTO PUBLIC RIGHTS–OF–WAY MUST BE REMOVED IMMEDIATELY.
8) WHEN WASHING IS REQUIRED, IT SHALL BE DONE ON AN AREA STABILIZED WITH STONE AND WHICH DRAINS INTO AN APPROVED SEDIMENT TRAPPING DEVICE.
9) PERIODIC INSPECTION AND NEEDED MAINTENANCE SHALL BE PROVIDED AFTER EACH RAIN.

STABILIZED CONSTRUCTION ENTRANCE DETAIL
NOT TO SCALE

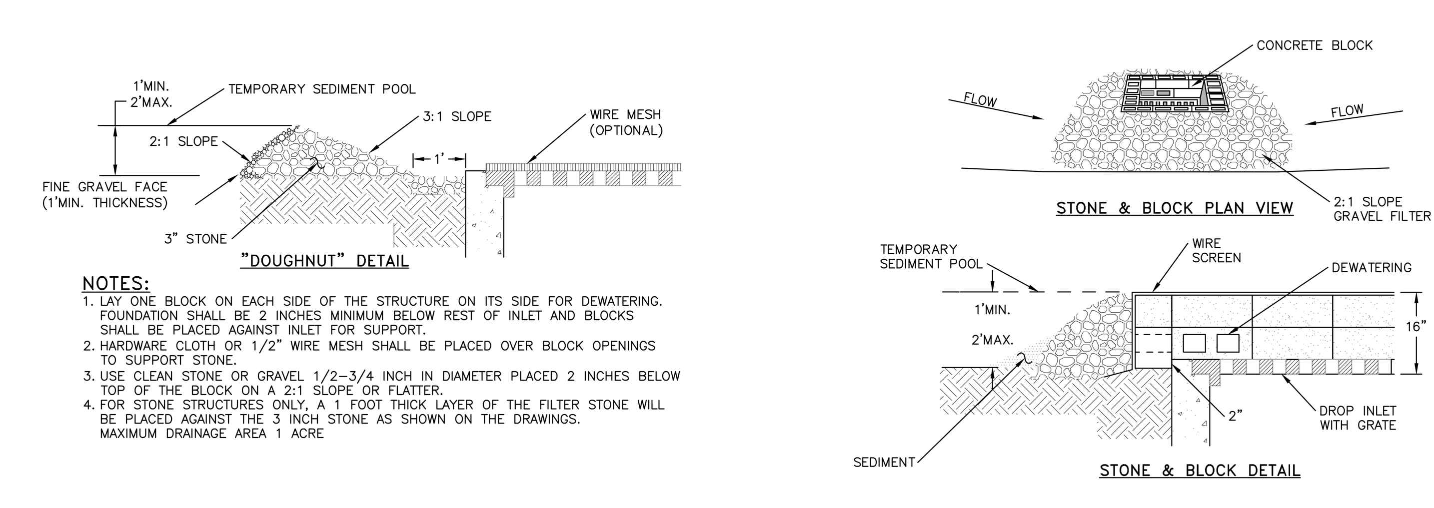

NOTES:
1. LAY ONE BLOCK ON EACH SIDE OF THE STRUCTURE ON ITS SIDE FOR DEWATERING. FOUNDATION SHALL BE 2 INCHES MINIMUM BELOW REST OF INLET AND BLOCKS SHALL BE PLACED AGAINST INLET FOR SUPPORT.
2. HARDWARE CLOTH OR 1/2" WIRE MESH SHALL BE PLACED OVER BLOCK OPENINGS TO SUPPORT STONE.
3. USE CLEAN STONE OR GRAVEL 1/2–3/4 INCH IN DIAMETER PLACED 2 INCHES BELOW TOP OF THE BLOCK ON A 2:1 SLOPE OR FLATTER.
4. FOR STONE STRUCTURES ONLY, A 1 FOOT THICK LAYER OF THE FILTER STONE WILL BE PLACED AGAINST THE 3 INCH STONE AS SHOWN ON THE DRAWINGS. MAXIMUM DRAINAGE AREA 1 ACRE

CATCH BASIN INLET PROTECTION DETAIL
NOT TO SCALE

DRAWN BY: CMB
CHECKED BY: DGK

REVISIONS:

NO.	DATE	DESCRIPTION	BY
1	12/25/18	PER PLANNING BOARD COMMENTS	CMB
2	1/29/19	PER PLANNING BOARD COMMENTS	CMB
3	2/26/19	ADDED CURB BREAK DETAIL	CMB
4	3/26/19	REMOVED CURB BREAK DETAIL	AG

REVISIONS:

NO.	DATE	DESCRIPTION	BY

Dig Safely. New York
800-962-7962
www.digsafelynewyork.org
Call Before You Dig
Wait The Required Time
Confirm Utility Response
Respect the Marks
Dig With Care

HUDSON LAND DESIGN
HUDSON LAND DESIGN
PROFESSIONAL ENGINEERING P.C.
174 MAIN ST., BEACON, NEW YORK 12508
13 CHAMBERS ST., NEWBURGH, NEW YORK 12550
PH: 845–440–6926
F: 845–440–6637

STATE OF NEW YORK · DANIEL G. KOEHLER · 082716 · LICENSED PROFESSIONAL ENGINEER
SEAL

CONSTRUCTION DETAILS
511 FISHKILL AVENUE

511 FISHKILL AVENUE
CITY OF BEACON
DUTCHESS COUNTY, NEW YORK
TAX ID: 6055–04–580285

JOB #: 2018:041
DATE: 11/27/18
SCALE: AS SHOWN
TITLE: CD–1
SHEET: 12 OF 13

UNAUTHORIZED ALTERATIONS OR ADDITIONS TO THIS DRAWING IS A VIOLATION OF SECTION 7209.2 OF THE NEW YORK EDUCATION LAW